Service

This manual is to be used by qualified appliance technicians only. Maytag does not assume any responsibility for property damage or personal injury for improper service procedures done by an unqualified person.

2006 Over-the-Range Domestic Microwaves

This Base Manual covers general information

Refer to individual Technical Sheet for information on specific models

This manual includes, but is not limited to the following:

UMV1152CA*
AMV1154BA*
AMV5164BA*
AMV5164BC*
AMV5206BA*
AMV6167BD*
MMV1153BA*
MMV4205BA*
MMV5165BA*
MMV5207BA*
MMV5207BC*
JMV8166BA*
JMV8208BA*
JMV8208BC*
JMV9169BA*

16027303
June 2006
Replaces 16027128

Important Information

Pride and workmanship go into every product to provide our customers with quality products. It is possible, however, that during its lifetime a product may require service. Products should be serviced only by a qualified service technician who is familiar with the safety procedures required in the repair and who is equipped with the proper tools, parts, testing instruments and the appropriate service manual. **REVIEW ALL SERVICE INFORMATION IN THE APPROPRIATE SERVICE MANUAL BEFORE BEGINNING REPAIRS.**

Important Notices for Consumers and Servicers

WARNING

To avoid risk of serious injury or death, repairs should not be attempted by an unauthorized service personnel, dangerous conditions (such as exposure to electrical shock) may result.

CAUTION

Maytag will not be responsible for any injury or property damage from improper service procedures. If performing service on your own product, assume responsibility for any personal injury or property damage which may result.

To locate an authorized servicer, please consult your telephone book or the dealer from whom you purchased this product. For further assistance, please contact:

Customer Service Support Center

CAIR Center

Web Site	Telephone Number
WWW.AMANA.COM	1-800-843-0304
WWW.MAYTAG.COM	1-800-688-9900
WWW.JENNAIR.COM	1-800-536-6247
CAIR Center in Canada	1-800-688-2002
Amana Canada Product	1-866-587-2002

Recognize Safety Symbols, Words, and Labels

DANGER

DANGER—Immediate hazards which **WILL** result in severe personal injury or death.

WARNING

WARNING—Hazards or unsafe practices which **COULD** result in severe personal injury or death.

CAUTION

CAUTION—Hazards or unsafe practices which **COULD** result in minor personal injury or product or property damage.

© 2006 Maytag Services

Table of Contents

Important Information 2
Important Safety Information 4
Microwave Leakage Testing 5
General Information
- Specifications 7
- Placement of the Oven 7
- Location of Model Number 7
- Model Identification 7
- Service 7
- Parts and Accessories 7
- Asure™ Extended Service Plan 7
- Radio Interference 7
- Electrical Requirements 8
- Cleaning 8
- Grounding Instructions 8
- Microwave Oven Description 9

Troubleshooting Procedures
- Troubleshooting Table 10
- Checkout Procedure: Fuse 11
- Error Code Table 12

Testing Procedures
- Component Testing Procedures 13
- Control Panel Sensor Test 16
- Power Test (Traditional Test Method) 17
- Traditional Power Test Temperature Chart 17
- Touch Pads/Control Panel
  - Switch Membrane Pinouts ..... 18 - 30

Disassembly Procedures
- Grille Removal 31
- Door Assembly Removal 31
- Door Disassembly 31
- Control Panel Removal 32
- Printed Circuit Board Removal 32
- Control Key Panel Removal 33
- Outer Case Removal 33
- Stirrer Assembly Removal 33
- Interlock Door Latch Switches Removal 34
- High Voltage Capacitor Removal 35
- Diode Removal 35
- Transformer Removal 35
- Replacing Fuse 35
- Magnetron Removal 35
- Magnetron Fan Assembly Removal 36
- Magnetron Thermal Fuse Removal 36
- Humidity Sensor Removal (Select Models) 36
- Oven Thermostat Removal 36
- Turntable Motor Removal 37
- Vent Blower Removal 37
- Convection Motor and Heater Element Removal (Select Models) 38
- Convection Heater Element Removal (Select Models) 38
- Light Socket Removal 38
- Grille Heater Element Removal (Select Models) 38

Appendix A
- Installation Instructions A-2

Appendix B
- Use and Care information B-2

Important Safety Information

⚠ CAUTION

Read the following information to avoid possible exposure to microwave radiation:

The basic design of the Maytag and Amana microwave oven makes it an inherently safe device to both use and service. However, there are some precautions which should be followed when servicing the microwave oven to maintain this safety. These are as follows:

1. Always operate the unit from an adequately grounded outlet. Do not operate on a two-wire extension cord.
2. Before servicing the unit (if unit is operable), perform the microwave leakage test.
3. The oven should never be operated if the door does not fit properly against the seal, the hinges or hinge bearings are damaged or broken; the choke is damaged, (pieces missing, etc.); or any other visible damage can be noted. Check the choke area to ensure that this area is clean and free of all foreign matter.
4. If the oven operates with the door open and produces microwave energy, take the following steps.
   A. Tell the user not to operate the oven.
   B. Contact Maytag immediately.
5. Always have the oven disconnected when the outer case is removed except when making the "live" tests called for in the Service Manual. Do not reach into the equipment area while the unit is energized. Make all connections for the test and check them for tightness before plugging the cord into the outlet.
6. Always ground the capacitors on the magnetron filter box and H. V. Capacitor with an insulated-handle screwdriver before working in the high voltage area of the equipment compartment. Some types of failures will leave a charge in these capacitors and the discharge could cause a reflex action which could make you injure yourself.
7. In the area of the transformer, capacitor, diode, and magnetron there is HIGH VOLTAGE. When the unit is operating, keep this area clean and free of anything which could possibly cause an arc or ground, etc.
8. Do not for any reason defeat the interlock switches. There is no valid reason for this action at any time; nor will it be condoned by Maytag.
9. **IMPORTANT:** Before returning a microwave to a customer, check for proper switch interlock action. The primary and secondary switches **MUST** open when the door is actuated. The monitor switch **MUST** close at a 1/4 inch when the door is opened.
10. Before returning a microwave to a customer, verify the door spacing is reasonably uniform along the top, bottom, and sides, and that it measures 1/8 inch or less.
11. The microwave oven should never be operated with:
    - Any components removed and/or bypassed.
    - Any of the safety interlocks failing.
    - Any of the seal surfaces failing, missing, or damaged.
12. To ensure that the unit does not emit excessive microwave leakage and to meet the Department of Health Human Service guidelines, check the oven for microwave leakage using Narda Model 8100, 8200, Holaday HI1500, HI1501 or Simpson 380M leakage monitor as outlined in the instructions. The maximum leakage level allowed is 4mW/cm^2.
13. If servicer encounters an emission reading over 4 mW/cm^2 the servicer must cease repair and contact the Maytag Service Department immediately for further direction. Maytag will contact the proper Government Agency upon verification of the test results.

© 2006 Maytag Services

Microwave Leakage Testing

⚠ WARNING

Check for radiation leakage after servicing. Should the leakage be more than 4mW/cm^2 inform Maytag immediately. After repairing or replacing any radiation safety device, keep a written record for future reference, as required by D.H.H.S. and HEW regulations. This requirement must be strictly observed. In addition, the leakage reading must be recorded on the service repair ticket while in the customer's home.

Equipment

- Electromagnetic radiation monitor
- 600 cc glass beaker

Procedure For Measuring Radiation Leakage

Note before measuring -

- Do not exceed meter full scale deflection. Leak monitor should initially be set to the highest scale.
- To prevent false readings the test probe should be held by the grip portion of the handle only.
- The scan speed is equal to one inch per antenna revolution or one inch per second if antenna speed is unknown.
- Areas to be checked are all door seal areas and any venting parts.
- Leakage with the outer panel removed...4mW/cm^2 or less.
- Leakage for fully assembled oven with door normally closed ...4mW/cm^2 or less.
- Leakage for a fully assembled oven (before the latch switch (primary) is interrupted) while pulling the door ... 4mW/cm^2 or less.

1 . Pour 275 ±15 cc (9 oz ±1/2 oz) of 20 ± 5°C (68 ± 9°F) water in a beaker which is graduated to 600 cc and place the beaker in the center of oven.
2. Set the radiation monitor to 2450 MHz and use it following the manufacturer's recommended test procedure to assure correct results.
3. While measuring the leakage, always use the two inch (5 cm) spacer supplied with the probe.
4. Press the start pad or turn on the timer and with the magnetron oscillating, measure the leakage by holding the probe perpendicular to the surface being measured.

Measurement With the Outer Panel Removed

⚠ DANGER

Avoid contacting any high voltage components.

Whenever you replace the magnetron, measure for radiation leakage before the outer panel is installed and after all necessary components are replaced or adjusted. Special care should be taken in measuring around the magnetron.

Measurement With a Fully Assembled Oven

After all components including the outer panel are fully assembled, measure for radiation leakage around the door periphery, the door viewing window, the exhaust opening, and air inlet openings.

Record Keeping and Notification After Measurement

1. After any adjustment or repair to a microwave oven, a leakage reading must be taken. Record this leakage reading on the repair ticket even if it is zero.
2. A copy of the repair ticket and the microwave leakage reading should be kept by the repair facility.

General Information

This manual provides basic instructions and suggestions for handling, installing , and servicing microwave ovens. The directions, information, and warnings in this manual are developed from experience with, and careful testing of the product. If the unit is installed according to the Installation Instructions, it will operate properly and will require minimal servicing. A unit in proper operating order ensures the consumer all the benefits provided by efficient microwave cooking.

This manual contains information needed by authorized service technicians to install and service the microwave pertaining to this manual. There maybe, however some information which needs further explanation. Refer to individual Installation Instructions, Use and Care, Technical Sheets, or toll free technical support line to answer questions from authorized service technicians.

Cooking Nomenclature

A M V 6 1 6 7 B D W

Brand

A	Amana
C	Magic Chef
G	Graffer & Sattler
H	Hardwick
J	Jenn-Air
M	Maytag
N	Norge
U	Universal
Y	Crosley

Fuel

B	Butane
D	Dual Fuel
E/J	Electric
G	Gas, Natural
L	Liquid Propane
M	Microwave
P	Standing Pilot
X	No Fuel
W	Warming Drawer

Product Type

A	Accessory/Cartridge
C	Cooktop Updraft/Countertop
D	Downdraft Cooktop or Warming Drawer
E	Eyelevel Range
G	Grill
L	Range (20")
M	Range (36")
P	Drop In (24")
Q	Wall Oven (27")
R	Range, Free-Standing (30")
S	Slide-In (30")
T	Range Hood
V	OTR
W	Wall Oven
Y	RV Range
Z	RV Top

Color

A	Almond on Almond
B	Black
C	Brushed Chrome
H	Traditional White
L	Traditional Almond
P	Prostyle
Q	Monochromatic Bisque
S	Stainless
T	Traditional Bisque
W	White on White
F	Frost White (True Color White)
N	Natural Bisque (True Color Bisque)

Listing

A	UL/AGA
C	CSA/CGA/CUL
D	Dual Listed
G	220-240 V / 50-60 Hz
M	Military Model
P	PSB Approved (Singapore)
X	Export 120 V / 60 Hz

Production Code

This identifies the production version.

Feature Content

1000-3999	Brands
4000-6999	Maytag/Amana
7000-9999	Jenn Air

© 2006 Maytag Services

General Information

Specifications

Refer to individual Technical Sheet for specification information.

Placement of the Oven

This microwave can be easily placed in the kitchen, family room, or anywhere else in the house. Place the oven on a flat surface such as a kitchen countertop or a specially designed microwave oven cart. Do not place oven above a gas or electric range. Free air flow around the oven is important.

Do Not Block Air Vents

All air vents must be kept clear during cooking. If air vents are covered during operation the oven may overheat. In this case, a sensitive thermal safety device automatically turns the oven off. The oven will be inoperable until the oven has cooled sufficiently.

Location of Model Number

To request service information or replacement parts, the service center will require the complete model, serial, and manufacturing number of your microwave oven. The number is located inside the oven door cavity as shown in the illustration below.

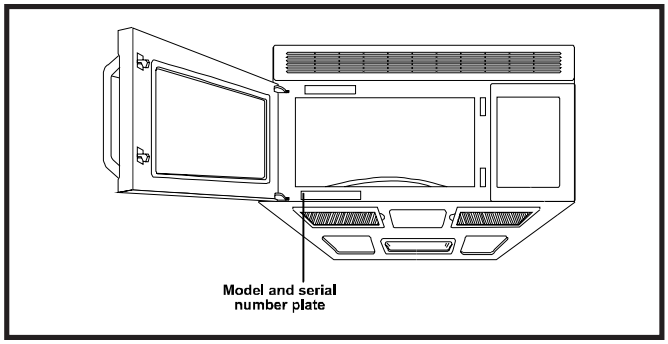

Model Identification

Complete enclosed registration card and promptly return. If registration card is missing:

- For Amana product call 1-800-843-0304 or visit the Web Site at www.amana.com
- For Maytag product call 1-800-688-9900 or visit the Web Site at www.maytag.com
- For Jenn-Air product call 1-800-536-6247 or visit the Web Site at www.jennair.com
- For product in Canada call 1-866-587-2002 or visit the Web Sites at www.amana.com, www.maytag.com or www.jennair.com

When contacting provide product information located on rating plate.

Record the following:

Model Number: _____

Manufacturing Number: _____

Serial or S/N Number: _____

Date of purchase: _____

Dealer's name and address: _____

Service

Keep a copy of sales receipt for future reference or in case warranty service is required. To locate an authorized servicer:

- For Amana product call 1-800-628-5782 or visit the Web Site at www.amana.com
- For Maytag/Jenn-Air product call 1-800-462-9824 or visit the Web Sites at www.maytag.com or www.jennair.com
- For product in Canada call 1-866-587-2002 or visit the Web Sites at www.amana.com, www.maytag.com or www.jennair.com

Warranty service must be performed by an authorized servicer. We also recommend contacting an authorized servicer, if service is required after warranty expires.

Parts and Accessories

Purchase replacement parts and accessories over the phone. To order accessories for your product call:

- For Amana product call 1-877-232-6771 or visit the Web Site at www.amana.com
- For Maytag/Jenn-Air product call 1-800-462-9824 or visit the Web Sites at www.maytag.com or www.jennair.com
- For product in Canada call 1-866-587-2002 or visit the Web Sites at www.amana.com, www.maytag.com or www.jennair.com

Extended Service Plan

We offer long-term service protection for this new oven.

- Asure™ Extended Service Plan is specially designed to supplement Amana's strong warranty. This plan covers parts, labor, and travel charges.
  Call 1-866-232-6244 for information.
- Dependability Plus™ Extended Service Plan is specially designed to supplement Maytag's and Jenn-Air's strong warranty. This plan covers parts, labor, and travel charges.
  Call 1-800-925-2020 for information.

Radio Interference

1. Microwave oven operation may interfere with the radio or TV reception.
2. When there is interference, it may be reduced or eliminated by taking the following measures:
   - Clean the door and the seal surface of the oven.
   - Reorient the receiving antenna of the radio or TV.
   - Relocate the microwave oven in relation to the radio or TV.
   - Move the microwave away from the receiver.
   - Plug the microwave into a different outlet so that the microwave and receiver are on different branch circuits.
3. 120 VAC, 60 Hz household outlet. Be sure the circuit is at least 15 or 20 A and the microwave oven is the only appliance on the circuit. It is not designed for 50 Hz or any circuit other than a 120 VAC, 60 Hz circuit.
   - Electrical Rating of the Oven: 120 VAC, 60 Hz.

© 2006 Maytag Services

General Information

Electrical Requirements

The oven is designed to operate on a Standard 120 VAC, 60 HZ household outlet.

Cleaning

Before cleaning the oven, unplug the power supply cord. If impossible, open the oven door to prevent an accidental oven start.

Inside of the Oven

Use a damp cloth to wipe out crumbs and spillovers. It is important to keep the area between door and cavity front clean to assure a tight seal. Remove greasy spatters with a sudsy cloth, then rinse and dry. Do not use harsh detergent or abrasive cleaners.

Glass Tray

The glass tray can be washed by hand or in the dishwasher.

Control Panel

Wipe with a damp cloth followed immediately by a dry cloth. The Child Lock feature is also useful when cleaning the control panel. Child Lock prevents accidental programming when wiping the control panel (if so equipped).

Door

If steam accumulates inside or around the outside of the oven door, wipe the panel with a soft cloth. This may occur when the microwave oven is operated under high humidity conditions and in no way indicates a malfunction of the unit.

Outside Oven Surface

Clean with damp cloth. To prevent damage to the operating parts inside the oven, the water should not be allowed to seep into the ventilation openings.
After cleaning the oven, be sure that the rotating ring and the glass tray are in the right position. Press the STOP/CLEAR pad twice to reset any accidental key setting.

Grounding Instructions

This appliance must be grounded. If an electrical short circuit occurs, grounding reduces the risk of electric shock by providing an escape wire for the electric current. The cord for this appliance has a grounding wire with a grounding plug. Put the plug into an outlet that is properly installed and grounded.

⚠ WARNING

To avoid risk of electric shock, personal injury or death, use grounding plug properly.

Ask a qualified electrician if you do not understand the grounding instructions or if you wonder whether the appliance is properly grounded.
Keep the electrical power cord dry and do not pinch or crush it in any way.

Properly Polarized and Grounded Outlet

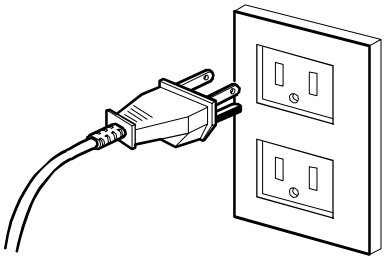

Three-Pronged (Grounding) Plug

For a permanently connected appliance: This appliance must be connected to a grounded, metallic, permanent wiring system, or an equipment grounding conductor should be run with the circuit conductors and connected to the equipment grounding terminal or lead on the appliance.

© 2006 Maytag Services

General Information

Microwave Oven Description

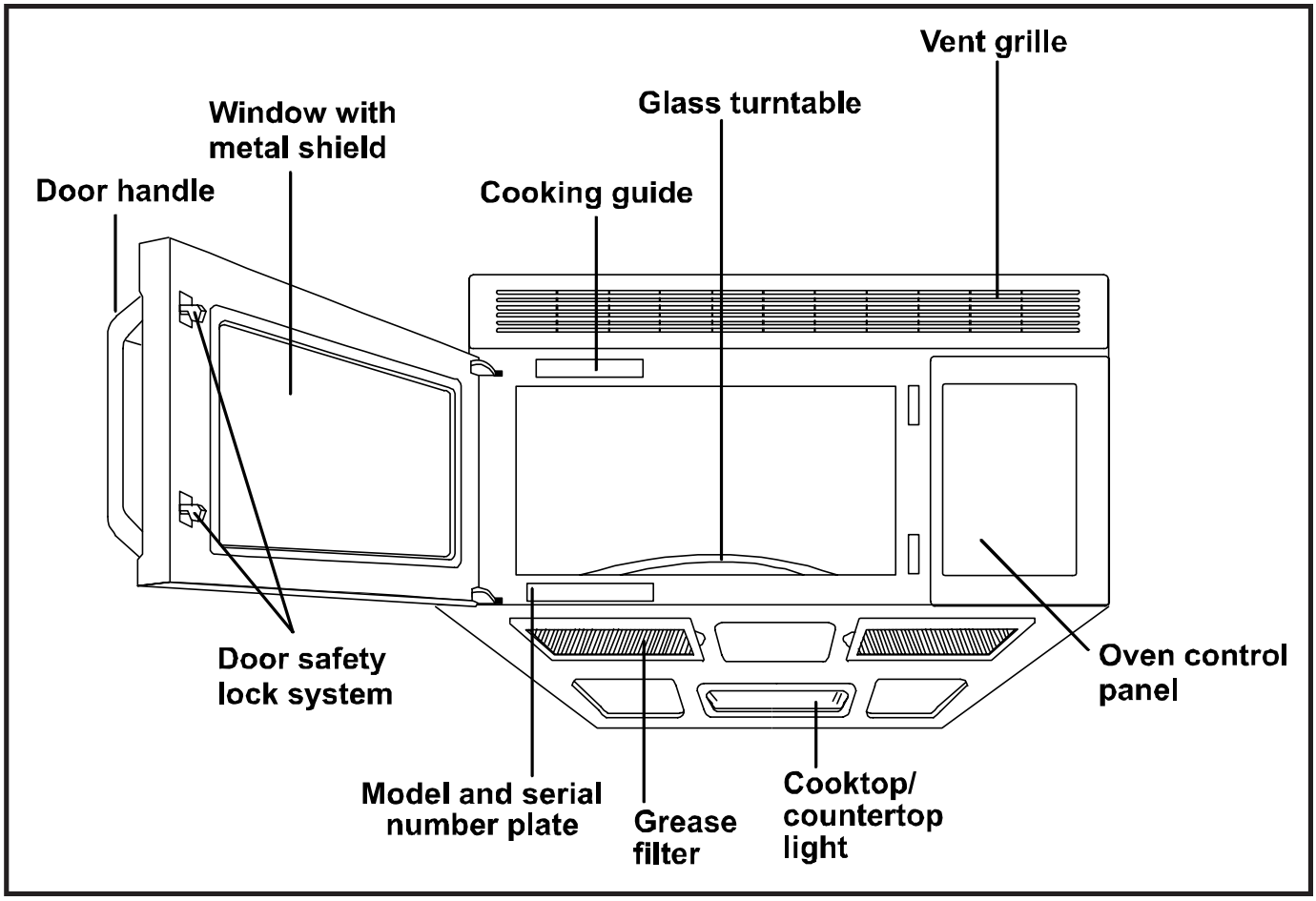

Troubleshooting Procedures

WARNING

To avoid risk of electrical shock, personal injury, or death, disconnect power to microwave oven and discharge the high-voltage capacitor before servicing, unless testing requires power.

CAUTION

- Verify proper grounding before checking for trouble.
- Be careful of the high voltage circuit.
- Discharge the high voltage capacitor.
- When checking the continuity of the switches or of the high voltage transformer, disconnect one lead wire from these parts and then check continuity with the AC plug removed. To do otherwise may result in a false reading or damage to your meter.
- Do not touch any part of the circuit on the printed circuit board, since static electric discharge may damage the control panel. Always touch yourself to ground while working on this panel to discharge any static charge built up in your body.

Troubleshooting Table

Symptom	Cause	Correction
Microwave oven does not work, no display, fuse is OK.	1. Open or loose wire harness. 2. Open thermal (magnetron) cutout. 3. Open low voltage transformer. 4. Defective PCB assembly.	If thermal (magnetron) cutout is defective, check fan motor. If low voltage transformer is defective, check PCB assembly.
Microwave oven does not work, no display, fuse is blown.	1. Open or loose wire harness. 2. Defective primary latch switch.* 3. Defective monitor switch.* 4. Shorted high voltage capacitor.* 5. Shorted high voltage transformer.*	Check adjustment of primary, interlock monitor and door sensing switches. Check power relay.
***NOTES:** If any primary, interlock monitor or door sensing switches are defective, replace all at the same time. If power relay contacts measure continuity, replace also. If high voltage transformer is replaced, check diode and magnetron also.		
Microwave oven does not accept key input (touch pad input).	1. Key input is not in-sequence. 2. Open or loose connection between key pad and PCB assembly. 3. Shorted or open key pad. 4. Defective PCB assembly.	Refer to operation instructions. Check connection between key pad and PCB assembly. Replace key pad membrane. Replace PCB assembly.
Microwave oven timer operational, but microwave does not oscillate (rotate).	1. Latch switches not aligned. 2. High voltage circuit loose connection (magnetron filament circuit). 3. Defective high voltage components. 4. Power relay wiring open or loose. 5. Primary latch switch defective. 6. Power relay or PCB assembly defective.	Adjust latch switches. Check connections to high voltage circuits (magnetron). Check transformer, capacitor, diode and magnetron fuse. Check power relay wiring. Replace power relay or PCB assembly.
Microwave oven lamp and fan motor activate.	1. Primary latch switch misadjusted or loose. 2. Primary latch switch defective.	Adjust door and latch switches. Replace all latch/door switches.
Microwave oven is programmable, but timer does not work.	1. Secondary interlock open or loose wiring. 2. Primary interlock switch misadjusted. 3. Secondary interlock switch defective.	Adjust door and latch switches. Adjust door and latch switches. Replace all latch/door switches.
Microwave oven output is low; microwave oven takes a long time to cook food.	1. Decrease in power source voltage. 2. High voltage circuit loose connection (magnetron filament circuit). 3. Magnetron aging.	Home voltage fluctuations. Check/replace magnetron. Check/replace magnetron.

© 2006 Maytag Services

Troubleshooting Procedures

WARNING

To avoid risk of electrical shock, personal injury, or death, disconnect power to microwave oven and discharge the high-voltage capacitor before servicing, unless testing requires power.

Symptom	Cause	Correction
Microwave oven fan motor engages when power cord is plugged in.	1. Door sensing switch loose connector. 2. Door sensing switch loose wires.	Check connector and wiring of door sensing switch.
Microwave oven does not operate, oven not in standby mode when power cord is plugged in.	1. Check input voltage. 2. Defective PCB assembly.	Make sure house outlet works. Replace PCB assembly.
Microwave oven emitting a loud, buzzing noise.	1. Fan and/or fan motor loose. 2. High voltage transformer loose. 3. High voltage diode shorted.	Check fan and/or fan motor. Check high voltage transformer. Replace high voltage diode.
Microwave oven turntable motor does not rotate.	1. Turntable motor wiring loose/open. 2. Defective turntable motor.	Check wiring of turntable motor. Replace turntable motor.
Microwave oven stops during cooking operation.	1. Open or loose wiring of primary interlock switch. 2. Open thermal (magnetron) cutout.	Adjust door and latch switches. Allow microwave oven to cool to determine if magnetron TCO is defective. Replace if necessary.
Microwave oven emits sparks when cooking.	1. Metallic ware or cooking dishes touching on the oven wall. 2. Ceramic ware trimmed with gold or silver powder.	Do not use cookware with metallic trimming or gold/silver powder.
Microwave oven cooks unevenly.	1. Uneven intensity of microwave due to microwave characteristics. 2. Microwave cavity dirty.	Cover food with plastic wrap or cover food with a lid. Clean microwave cavity.
Microwave oven turntable emits noise when operating.	1. Turntable motor loose. 2. Turntable motor defective.	Tighten screws securing motor. Replace turntable motor.

Checkout Procedure: Fuse

PROBLEM	CAUSE
Fuse blows immediately after door is closed.	Improper operation of the primary interlock and secondary interlock switches and/or interlock monitor switch.
Fuse blows immediately after door is opened.	
Fuse blows when door is closed and START key is touched.	Malfunction of high voltage transformer; high voltage capacitor including diode, magnetron, blower motor or circuit board.

NOTES: Replace blown fuse with 20 Amp fuse.
If the fuse is blown due to an improper switch operation, replace all interlock switches, PCB Ass'y and the fuse simultaneously, and ensure they are connected properly.
Check for microwave energy leakage after replacing interlock and monitor switches.

Troubleshooting Procedures

WARNING

To avoid risk of electrical shock, personal injury, or death, disconnect power to microwave oven and discharge the high-voltage capacitor before servicing, unless testing requires power.

Error Code Table

Error Code	Explanation	Possible Cause
SE	Keypad shorted 10 seconds or longer.	Sticky keypad(s).
E03	Convection motor or convection heater open.	Motor and/or heater unplugged, wiring or PCB assembly.
E11	Gas sensor open error.	Sensor unplugged, wiring or PCB assembly.
E12	Gas sensor short error.	Sensor unplugged, wiring or PCB assembly.
E13	T1 Max time error (oven did not preheat properly).	PCB assembly.
E21	Thermal sensor open error.	Sensor unplugged, wiring or PCB assembly.
E22	Thermal sensor short error.	Sensor unplugged, wiring or PCB assembly.
E23	PREHEAT did not reach preset temperature within 30 minutes. Preheat cycle canceled.	Convection heater or grill heater unplugged, wiring or PCB assembly.
E24	Microwave temperature reaches 500° F (260° C) in overheat condition. Microwave cancels all functions.	Thermal or gas sensor, wiring or PCB assembly.
E61	Sensor open error.	Sensor unplugged, wiring or PCB assembly.
E62	Sensor shorted error.	Sensor shorted or PCB assembly.
E63	T1 Max Time error.	PCB assembly.

© 2006 Maytag Services

Testing Procedures

WARNING

To avoid risk of electrical shock, personal injury or death; disconnect power to microwave oven and discharge the high voltage capacitor before servicing, unless testing requires power.

Component Testing Procedures

Illustration	Component	Test Procedure	Results
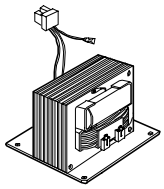 *JMV9169BA*, JMV8166BA**	High voltage transformer 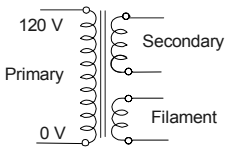 	**Discharge Capacitor** Disconnect connector and measure continuity with meter on R x 1 scale: Secondary ..... Filament ..... Primary (High & Low) ..... (Measure at room temp., or 70° F/ 22° C.) Measure continuity with meter on "High" scale: Primary winding to ground..... Filament winding to ground	 Approx. 118-123 Ω. Continuity. Less than 1 Ω. Infinite Ω. Infinite Ω.
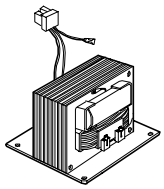 *AMV6167BD**	High voltage transformer 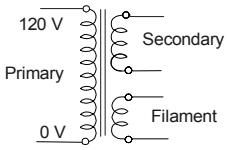 	**Discharge Capacitor** Disconnect connector and measure continuity with meter on R x 1 scale: Secondary ..... Filament ..... Primary (High & Low) ..... (Measure at room temp., or 70° F/ 22° C.) Measure continuity with meter on "High" scale: Primary winding to ground..... Filament winding to ground	 Approx. 65-69 Ω. Continuity. Less than 1 Ω. Infinite Ω. Infinite Ω.
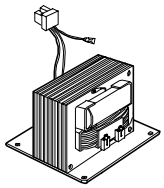 *MMV5207B**, JMV8208B**, MMV4205BA**	High voltage transformer 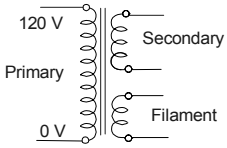 	**Discharge Capacitor** Disconnect connector and measure continuity with meter on R x 1 scale: Secondary ..... Filament ..... Primary (High & Low) ..... (Measure at room temp., or 70° F/ 22° C.) Measure continuity with meter on "High" scale: Primary winding to ground..... Filament winding to ground	 Approx. 88-92 Ω. Continuity. Less than 1 Ω. Infinite Ω. Infinite Ω.
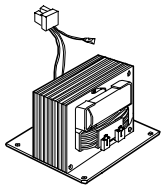 *AMV5164BC**	High voltage transformer 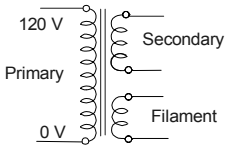 	**Discharge Capacitor** Disconnect connector and measure continuity with meter on R x 1 scale: Secondary ..... Filament ..... Primary (High & Low) ..... (Measure at room temp., or 70° F/ 22° C.) Measure continuity with meter on "High" scale: Primary winding to ground..... Filament winding to ground	 Approx. 67-72 Ω. Continuity. Less than 1 Ω. Infinite Ω. Infinite Ω.
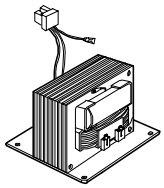 *AMV5164BA*, MMV5165BA*, AMV1154BA*, MMV1153BA*, UMV1152CA**	High voltage transformer 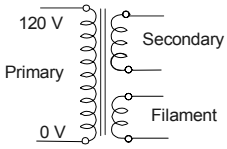 	**Discharge Capacitor** Disconnect connector and measure continuity with meter on R x 1 scale: Secondary ..... Filament ..... Primary..... (Measure at room temp, or 70° F/ 22° C.) Measure continuity with meter on "High" scale: Primary winding to ground..... Filament winding to ground	 Approx. 100-104 Ω. Continuity. Less than 1 Ω. Infinite Ω. Infinite Ω.
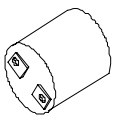	Lamp receptacle	Test continuity of receptacle terminals	Continuity when known good bulb is inserted.

Testing Procedures

WARNING

To avoid risk of electrical shock, personal injury or death; disconnect power to microwave oven and discharge the high voltage capacitor before servicing, unless testing requires power.

Illustration	Component	Test Procedure	Results
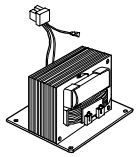	Low voltage transformer	Remove low voltage transformer from control circuit board and check: (Measure at room temp., or 68° F/20° C.) Between pins 1 and 2 (Input)..... Between pins 4 and 5 (19v output)..... Between pins 6 and 7 (7.0v output)..... Between pins 7 and 8 (2.7v output).....	 Approx. 128 Ω.. Approx. 2 Ω.. Approx. 2 Ω.. Approx. 5 Ω..
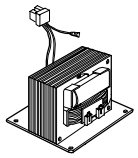	Low voltage transformer *AMV5164BC*, MMV5165BA**	Remove low voltage transformer from control circuit board and check: (Measure at room temp., or 68° F/20° C.) Between pins 1 and 2 (Input)..... Between pins 4 and 5 (19v output)..... Between pins 7 and 8 (2.7v output).....	 Approx. 243 Ω.. Approx. 11 Ω.. Approx. 2 Ω..
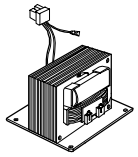	Low voltage transformer *AMV5164BA*, AMV1154BA*, MMV1153BA*, UMV1152CA**	Remove low voltage transformer from control circuit board and check: (Measure at room temp., or 68° F/20° C.) Between pins 1 and 2 (Input)..... Between pins 4 and 5 (19v output)..... Between pins 7 and 8 (2.7v output).....	 Approx. 379 Ω.. Approx. 11 Ω.. Approx. 2 Ω..
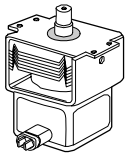	Magnetron	**Discharge Capacitor** Remove wires from magnetron and connect ohmmeter to terminals. Also check between each terminal and ground.	**Between Terminals:** Less than 1 Ω. **Each Terminal to Ground:** Infinite Ω.. **NOTE:** This test is not conclusive. If microwave oven does not heat and all other components test good, replace the magnetron and retest.
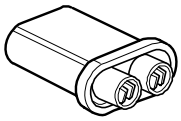	High Voltage Capacitor	**Discharge Capacitor** Remove wires from capacitor terminals and connect ohmmeter, set on highest resistance scale to terminals. Check resistance between each terminal and capacitor case.	**Between Terminals:** Meter should momentarily indicate continuity, then 9 MΩ (deflection). A steady 9 MΩ indicates an open capacitor. Steady continuity indicates a shorted capacitor. In either case, replace capacitor. Infinite Ω.
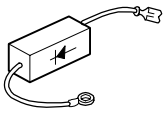	High Voltage Diode	**Discharge Capacitor** Remove diode lead from capacitor and connect ohmmeter. Reverse leads for second test.	Infinite resistance should be measured in one direction and several hundred KΩ in the opposite direction. **NOTE:** Ohmmeter must contain a battery of 6 volts minimum.
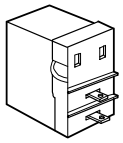 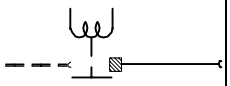	Power Control Relay	Disconnect the leads. Place water in the microwave oven and select power levels 1 through 10. Press the **START** pad. Check continuity between the terminals of the relays...	**Power Level** / **Cycle On** (Continuity) / **Cycle Off** (Open) 1: 4 sec / 26 sec 2: 7 sec / 23 sec 3: 10 sec / 20 sec 4: 13 sec / 17 sec 5: 16 sec / 14 sec 6: 19 sec / 11 sec 7: 22 sec / 8 sec 8: 25 sec / 5 sec 9: 28 sec / 2 sec 10: 30 sec / 0 sec
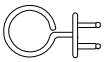	Grill heater element *JMV9169BA*, JMV8166BA*, AMV6167BD**	Remove all wires from heater. Measure resistance across terminals	Approx. 15-25 Ω (70° F, 20° C).

© 2006 Maytag Services

Testing Procedures

WARNING

To avoid risk of electrical shock, personal injury or death; disconnect power to microwave oven and discharge the high voltage capacitor before servicing, unless testing requires power.

Illustration	Component	Test Procedure	Results
	Convection heater element *JMV9169BA*,* *JMV8166BA*,* *AMV6167BD**	Remove all wires from heater. Measure resistance across terminals	Approx. 15-25 Ω (70° F, 20° C).
	Convection motor *JMV9169BA*,* *JMV8166BA*,* *AMV6167BD**	Remove all wires from motor. Measure resistance across coil.....	Approx. 14.5 - 17 Ω.
	Primary interlock switch test (Bottom switch)	Measure resistance between terminals 1 and 2: Door Open..... Door Closed	 Open (Infinite). Continuity.
	Secondary interlock switch test (Top switch)	Measure resistance between terminals 1 and 2: Door Open..... Door Closed	 Open (Infinite). Continuity.
	Interlock monitor switch test (Middle switch)	Measure resistance between terminals 1 and 2: Door Open..... Door Closed	 Continuity. Open (Infinite).
	Fan motor *MMV4205BA*, AMV5206BA*, MMV5207BA, JMV8208B**, JMV9169BA*, JMV8166BA*, AMV6167BD**	Remove all wires from motor. Measure resistance	 Approx. 28 - 35 Ω. Infinite or several, motor is defective.
	Stirrer Motor *UMV1152CA*, AMV1154BA*, AMV5164BA*, MMV1153BA*, MMV5165BA**	Measure voltage across terminals ..... Measure resistance across terminals	Approx. 120 VAC. Approx. 3 to 4 Ω.
	Stirrer Motor	Measure voltage across terminals ..... Measure resistance across terminals	Approx. 120 VAC. Approx. 108 to 132 kΩ.
	Turntable Motor *UMV1152CA*, AMV1154BA*, AMV5164BA*, MMV1153BA*, MMV5165BA**	Measure voltage across terminals ..... Measure resistance across terminals	Approx. 120 VAC. Approx. 3 to 4 Ω.
	Turntable Motor	Measure voltage across terminals ..... Measure resistance across terminals	Approx. 120 VAC. Approx. 108 to 132 kΩ.
	Damper Motor *JMV9169BA*, JMV8166BA*, AMV6167BD**	Measure voltage across terminals ..... Measure resistance across terminals	Approx. 120 VAC. Approx. 3 to 4 kΩ.
	Louvre Motor *JMV8208B**, JMV9169BA*, JMV8166BA*, AMV6167BD**	Measure voltage across terminals ..... Measure resistance across terminals	Approx. 120 VAC. Approx. 3100 to 3900 kΩ.

Testing Procedures

WARNING

To avoid risk of electrical shock, personal injury or death; disconnect power to microwave oven and discharge the high voltage capacitor before servicing, unless testing requires power.

Illustration	Component	Test Procedure	Results
	Ventilation Motor *JMV8166BA*, AMV6167BD**	**Discharge Capacitor** Remove two wires to run capacitor and measure resistance across the wires	Approx. 75 Ω. (Tests all 3 windings.)
	Ventilation Motor *JMV9169BA**	**Discharge Capacitor** Remove two wires to run capacitor and measure resistance across the wires	Approx. 25 Ω. (Tests all 3 windings.)
	Vent Blower Motor (run) Capacitor	**Discharge Capacitor** Remove one wire from capacitor terminals and connect ohmmeter. Set on highest resistance scale.	**Between Terminals:** Meter should momentarily indicate several ohms, then return to infinity (deflection). If no deflection occurs, or if continuous deflection occurs, replace capacitor. **Terminal to Case:** Infinite resistance.
	Cavity (Flame Sensor) Thermal Cut-Out (Thermostat)	Disconnect all wires from TCO. Measure resistance across terminals.....	Non–resetable. **Open:** ..... 212° F (100° C).
	Cavity (Flame Sensor) Thermal Cut-Out (Thermostat)	Disconnect all wires from TCO. Measure resistance across terminals.....	Resetable. **Open:** ..... 302° F (150° C). **Closed:** .. 140° F (60° C).
	Cavity (Flame Sensor) Thermal Cut-Out (Thermostat)	Disconnect all wires from TCO. Measure resistance across terminals.....	Non–resetable. **Open:** ..... 248° F (120° C).
	Magnetron Thermal Cut-Out (Thermostat)	Disconnect all wires from TCO. Measure resistance across terminals.....	Resetable. **Open:** ..... 302° F (150° C). **Closed:** .. 140° F (60° C).
	Hood Thermal Cut-Out (Thermostat)	Disconnect all wires from TCO. Measure resistance across terminals..... **NOTE:** This TCO only works in an overheat condition. Otherwise, it will measure "open" when testing.	Resetable. **Open:** ..... 158° F (70° C). Vent fan engaged. **Closed:** .. 104° F (40° C). Vent fan disengaged.
	Bottom Thermal Cut-Out (Thermostat)	Disconnect all wires from TCO. Measure resistance across terminals.....	Non–resetable. **Open:** ..... 248° F (120° C).
	Sensor	Remove the red and black wires, connect meter to red and black wires and measure continuity..... **NOTE:** Do not connect the meter to the white and orange wires, as this may damage the sensor.	30 Ω.

Control Panel Sensor Test

Illustration	Component	Test Procedure	Results
	Sensor Test	Apply power to microwave for 5 minutes. Press **AUTO DEFROST** and **REHEAT** pads simultaneously and monitor display for V-Out value..... **NOTE:** Press **AUTO DEFROST** and **POPCORN** pads for model *AMV6167BD**.	Less than 6 ..... Sensor failure. 15 to 185..... Normal. More than 213..... Sensor failure.
1 2 3	Sensor Test *AMV5164B**,* *MMV5165BA**	Apply power to microwave for 5 minutes. Press **AUTO DEFROST** and **REHEAT** pads simultaneously and monitor display for V-Out value.....	Less than 10 ..... Sensor failure. 10 to 150..... Normal. More than 150..... Sensor failure.

© 2006 Maytag Services

Testing Procedures

WARNING

To avoid risk of electrical shock, personal injury or death; disconnect power to microwave oven and discharge the high voltage capacitor before servicing, unless testing requires power.

Power Test (Traditional Test Method)

Test equipment required is Amana power test kit R0157397 (Fahrenheit), or
Menumaster power test kit M95D5 (Celsius).

1. Fill the plastic container to the 1000 ml. line with cool tap water.
2. Using the thermometer; stir the water, measure, and record the water temperature.
   Initial water temperature should be approximately 60° F (16° C).
3. Place container on the center of the oven shelf and heat the water for
   33 seconds for ovens with more than 1550 watts or 63 seconds for ovens with less than 1550 watts.

NOTE: Use a watch second hand, not the oven timer.

4. Stir the water, measure and record the temperature of the water after heating time is complete.
5. Subtract the starting water temperature (Step 2), from the ending water temperature (Step 4) to obtain the temperature rise (ΔT).
6. See the Traditional Power Test Temperature Chart below.

NOTES:

- The IEC-705 test method requires precision measurements and equipment. It is not practical to perform the IEC test in the field. To convert the traditional power test results to the approximate IEC-705 rating, take the traditional power test results and add 100 watts per magnetron for the unit being tested.

  Example:

	850	watts output using the traditional power test
+	100	watts (1 magnetron X 100 watts)
	950	Approximate IEC-705 results

- Always perform power test three times for accuracy, changing the water after each test is performed.
- Variation or errors in the test procedure will cause a variance in the temperature rise. Additional power tests should be made if temperature rise appears marginal.
- Low line voltage will cause lower temperature rise.

Traditional Power Test Temperature Chart

SIXTY-THREE (63) SECONDS run time chart for units less than 1550 watts cooking power

Fahrenheit				Celsius			
ΔT (° F)	Cooking Power Output	ΔT (° F)	Cooking Power Output	ΔT (° C)	Cooking Power Output	ΔT (° C)	Cooking Power Output
16	620	23	891	7	490	15	1050
17	659	24	930	8	560	16	1120
18	697	25	969	9	630	17	1190
19	736	26	1007	10	700	18	1260
20	775	27	1046	11	770	19	1330
21	814	28	1085	12	840	20	1400
22	852	29	1124	13	910	21	1470
				14	980	22	1540

Testing Procedures

WARNING

To avoid risk of electrical shock, personal injury or death; disconnect power to microwave oven and discharge the high voltage capacitor before servicing, unless testing requires power.

Component	Test Procedure	Results		
Touch Pad/Control Panel ***UMV1152CA****	Removal of Touch Pad/Control Panel is required to perform test. Check for continuity. When touched: Less than 400 Ω. When not touched: More than 1 mega Ω.	**Pad**	**Trace**	**Measurement**
		1	2 & 12	Continuity
		2	3 & 12	Continuity
		3	4 & 12	Continuity
		4	5 & 12	Continuity
		5	6 & 12	Continuity
		6	1 & 13	Continuity
		7	2 & 13	Continuity
		8	3 & 13	Continuity
		9	4 & 13	Continuity
		0	1 & 12	Continuity
		Enter/Start	1 & 9	Continuity
		Add 30 Seconds	2 & 9	Continuity
		Popcorn	3 & 9	Continuity
		Baked Potato	4 & 9	Continuity
		Vent Hi/Lo/Off	6 & 9	Continuity
		Reheat	2 & 10	Continuity
		Auto Defrost	3 & 10	Continuity
		Power Level	4 & 10	Continuity
		Light Hi/Lo/Off	6 & 10	Continuity
		Stop Clear	1 & 11	Continuity
		Clock	2 & 11	Continuity
		Kitchen Timer	3 & 11	Continuity
		Sound On/Off	4 & 11	Continuity
		Vegetables	6 & 11	Continuity
		Cook	5 & 13	Continuity
		Pizza Slice	6 & 13	Continuity
Touch Pad/Control Panel ***MMV1153BA****	Removal of Touch Pad/Control Panel is required to perform test. Check for continuity. When touched: Less than 400 Ω. When not touched: More than 1 mega Ω.	**Pad**	**Trace**	**Measurement**
		1	2 & 12	Continuity
		2	3 & 12	Continuity
		3	4 & 12	Continuity
		4	5 & 12	Continuity
		5	6 & 12	Continuity
		6	1 & 13	Continuity
		7	2 & 13	Continuity
		8	3 & 13	Continuity
		9	4 & 13	Continuity
		0	1 & 12	Continuity
		Enter/Start	1 & 9	Continuity
		Add 30 Seconds	2 & 9	Continuity
		Popcorn	3 & 9	Continuity
		Baked Potato	4 & 9	Continuity
		Vent Hi/Lo/Off	6 & 9	Continuity
		Reheat	2 & 10	Continuity
		Auto Defrost	3 & 10	Continuity
		Power Level	4 & 10	Continuity
		Light Hi/Lo/Off	6 & 10	Continuity
		Stop Clear	1 & 11	Continuity
		Clock	2 & 11	Continuity
		Kitchen Timer	3 & 11	Continuity
		Sound On/Off	4 & 11	Continuity
		Vegetables	6 & 11	Continuity
		Cook	5 & 13	Continuity
		Pizza Slice	6 & 13	Continuity

© 2006 Maytag Services

Testing Procedures

WARNING

To avoid risk of electrical shock, personal injury or death; disconnect power to microwave oven and discharge the high voltage capacitor before servicing, unless testing requires power.

Component	Test Procedure	Results		
Touch Pad/Control Panel	Removal of Touch Pad/Control Panel is required to perform test. Check for continuity.	**Pad**	**Trace**	**Measurement**
		1	2 & 12	Continuity
		2	3 & 12	Continuity
		3	4 & 12	Continuity
		4	5 & 12	Continuity
AMV1154BA*	When touched: Less than 400 Ω. When not touched: More than 1 mega Ω.	5	6 & 12	Continuity
		6	1 & 13	Continuity
		7	2 & 13	Continuity
		8	3 & 13	Continuity
		9	4 & 13	Continuity
		0	1 & 12	Continuity
		Enter/Start	1 & 9	Continuity
		Add 30 Seconds	2 & 9	Continuity
		Popcorn	3 & 9	Continuity
		Baked Potato	4 & 9	Continuity
		Vent Hi/Lo/Off	6 & 9	Continuity
		Reheat	2 & 10	Continuity
		Auto Defrost	3 & 10	Continuity
		Power Level	4 & 10	Continuity
		Light Hi/Lo/Off	6 & 10	Continuity
		Stop Clear	1 & 11	Continuity
		Clock	2 & 11	Continuity
		Kitchen Timer	3 & 11	Continuity
		Sound On/Off	4 & 11	Continuity
		Vegetables	6 & 11	Continuity
		Cook	5 & 13	Continuity
		Pizza Slice	6 & 13	Continuity
Touch Pad/Control Panel	Removal of Touch Pad/Control Panel is required to perform test. Check for continuity.	**Pad**	**Trace**	**Measurement**
		1	8 & 16	Continuity
		2	7 & 16	Continuity
		3	6 & 16	Continuity
		4	5 & 16	Continuity
AMV5164BA*	When touched: Less than 400 Ω. When not touched: More than 1 mega Ω.	5	4 & 16	Continuity
		6	3 & 16	Continuity
		7	9 & 15	Continuity
		8	8 & 15	Continuity
		9	7 & 15	Continuity
		0	9 & 16	Continuity
		Vegetables	8 & 10	Continuity
		Cook	9 & 10	Continuity
		Pizza Slice	3 & 11	Continuity
		Option	2 & 10	Continuity
		Baked Potato	6 & 12	Continuity
		Popcorn	7 & 12	Continuity
		Light Hi/Lo/Off	8 & 12	Continuity
		1 Pound Defrost	9 & 12	Continuity
		Add 30 Seconds	4 & 13	Continuity
		Reheat	5 & 13	Continuity
		Light Timer	6 & 13	Continuity
		Control Setup	7 & 13	Continuity
		Turntable On/Off	8 & 13	Continuity
		Kitchen Timer	9 & 13	Continuity
		Custom Program	3 & 14	Continuity
		Auto Defrost	4 & 14	Continuity
		Enter/Start	5 & 14	Continuity
		Clock	9 & 14	Continuity
		Power Level	3 & 15	Continuity
		Stop/Clear	4 & 15	Continuity
		Vent Hi/Lo/Off	6 & 15	Continuity

Testing Procedures

WARNING

To avoid risk of electrical shock, personal injury or death; disconnect power to microwave oven and discharge the high voltage capacitor before servicing, unless testing requires power.

Component	Test Procedure	Results		
Touch Pad/Control Panel	Removal of Touch Pad/Control Panel is required to perform test. Check for continuity.	**Pad**	**Trace**	**Measurement**
		1	8 & 16	Continuity
		2	7 & 16	Continuity
		3	6 & 16	Continuity
		4	5 & 16	Continuity
MMV5165BA*	When touched: Less than 400 Ω. When not touched: More than 1 mega Ω.	5	4 & 16	Continuity
		6	3 & 16	Continuity
		7	9 & 15	Continuity
		8	8 & 15	Continuity
		9	7 & 15	Continuity
		0	9 & 16	Continuity
		5 Speed	3 & 10	Continuity
		On/Off	4 & 10	Continuity
		Vegetables	8 & 10	Continuity
		Cook	9 & 10	Continuity
		Option	2 & 11	Continuity
		Pizza Slice	3 & 11	Continuity
		Baked Potato	6 & 12	Continuity
		Popcorn	7 & 12	Continuity
		Light Hi/Lo/Off	8 & 12	Continuity
		1 Pound Defrost	9 & 12	Continuity
		Delay Off	3 & 13	Continuity
		Add 30 Seconds	4 & 13	Continuity
		Reheat	5 & 13	Continuity
		Light Timer	6 & 13	Continuity
		Control Setup	7 & 13	Continuity
		Kitchen Timer	9 & 13	Continuity
		Custom Program	3 & 14	Continuity
		Auto Defrost	4 & 14	Continuity
		Enter/Start	5 & 14	Continuity
		Clock	9 & 14	Continuity
		Power Level	3 & 15	Continuity
		Stop Clear	4 & 15	Continuity

© 2006 Maytag Services

Testing Procedures

WARNING

To avoid risk of electrical shock, personal injury or death; disconnect power to microwave oven and discharge the high voltage capacitor before servicing, unless testing requires power.

Component	Test Procedure	Results		
Touch Pad/Control Panel	Removal of Touch Pad/Control Panel is required to perform test. Check for continuity.	**Pad**	**Trace**	**Measurement**
		1	6 & 15	Continuity
		2	5 & 15	Continuity
		3	4 & 15	Continuity
		4	3 & 15	Continuity
MMV4205BA*	When touched: Less than 400 Ω.	5	2 & 15	Continuity
		6	1 & 15	Continuity
	When not touched: More than 1 mega Ω.	7	7 & 14	Continuity
		8	6 & 14	Continuity
		9	5 & 14	Continuity
		0	7 & 15	Continuity
		Pizza Slice	1 & 10	Continuity
		Vegetables	2 & 10	Continuity
		Cook	3 & 10	Continuity
		Beverage	3 & 11	Continuity
		Baked Potato	4 & 11	Continuity
		Popcorn	5 & 11	Continuity
		Light Hi/Lo/Off	6 & 11	Continuity
		1 Pound Defrost	7 & 11	Continuity
		Add 30 Seconds	2 & 12	Continuity
		Reheat	3 & 12	Continuity
		Light Timer	4 & 12	Continuity
		Control Setup	5 & 12	Continuity
		Turntable On/Off	6 & 12	Continuity
		Kitchen Timer	7 & 12	Continuity
		Custom Program	1 & 13	Continuity
		Auto Defrost	2 & 13	Continuity
		Enter Start	3 & 13	Continuity
		Snacks	4 & 13	Continuity
		Kids Meals	5 & 13	Continuity
		Soften/Melt	6 & 13	Continuity
		Clock	7 & 13	Continuity
		Power Level	1 & 14	Continuity
		Stop/Clear	2 & 14	Continuity
		Vent Hi/Lo/Off	4 & 14	Continuity
		Option	9 & 14	Continuity

Testing Procedures

WARNING

To avoid risk of electrical shock, personal injury or death; disconnect power to microwave oven and discharge the high voltage capacitor before servicing, unless testing requires power.

Component	Test Procedure	Results		
Touch Pad/Control Panel ***AMV5206BA****	Removal of Touch Pad/Control Panel is required to perform test. Check for continuity. When touched: Less than 400 Ω. When not touched: More than 1 mega Ω.	**Pad**	**Trace**	**Measurement**
		1	6 & 15	Continuity
		2	5 & 15	Continuity
		3	4 & 15	Continuity
		4	3 & 15	Continuity
		5	2 & 15	Continuity
		6	1 & 15	Continuity
		7	7 & 14	Continuity
		8	6 & 14	Continuity
		9	5 & 14	Continuity
		0	7 & 15	Continuity
		Pizza Slice	1 & 10	Continuity
		Vegetables	2 & 10	Continuity
		Cook	3 & 10	Continuity
		5 Speed	6 & 10	Continuity
		On/Off	7 & 10	Continuity
		Baked Potato	4 & 11	Continuity
		Popcorn	5 & 11	Continuity
		Light Hi/Lo/Off	6 & 11	Continuity
		1 Pound Defrost	7 & 11	Continuity
		Option	9 & 11	Continuity
		Delay Off	1 & 12	Continuity
		Add 30 Seconds	2 & 12	Continuity
		Reheat	3 & 12	Continuity
		Light Timer	4 & 12	Continuity
		Control Setup	5 & 12	Continuity
		Turntable On/Off	6 & 12	Continuity
		Kitchen Timer	7 & 12	Continuity
		Custom Program	1 & 13	Continuity
		Auto Defrost	2 & 13	Continuity
		Enter Start	3 & 13	Continuity
		Snacks	4 & 13	Continuity
		Kids Meals	5 & 13	Continuity
		Soften/Melt	6 & 13	Continuity
		Clock	7 & 13	Continuity
		Power Level	1 & 14	Continuity
		Stop/Clear	2 & 14	Continuity

© 2006 Maytag Services

Testing Procedures

WARNING

To avoid risk of electrical shock, personal injury or death; disconnect power to microwave oven and discharge the high voltage capacitor before servicing, unless testing requires power.

Component	Test Procedure	Results		
Touch Pad/Control Panel ***MMV5207BA******	Removal of Touch Pad/Control Panel is required to perform test. Check for continuity. When touched: Less than 400 Ω. When not touched: More than 1 mega Ω.	**Pad**	**Trace**	**Measurement**
		1	6 & 15	Continuity
		2	5 & 15	Continuity
		3	4 & 15	Continuity
		4	3 & 15	Continuity
		5	2 & 15	Continuity
		6	1 & 15	Continuity
		7	7 & 14	Continuity
		8	6 & 14	Continuity
		9	5 & 14	Continuity
		0	7 & 15	Continuity
		Pizza Slice	1 & 10	Continuity
		Vegetables	2 & 10	Continuity
		Cook	3 & 10	Continuity
		5 Speed	6 & 10	Continuity
		On/Off	7 & 10	Continuity
		Option	9 & 10	Continuity
		Baked Potato	4 & 11	Continuity
		Popcorn	5 & 11	Continuity
		Light Hi/Lo/Off	6 & 11	Continuity
		1 Pound Defrost	7 & 11	Continuity
		Delay Off	1 & 12	Continuity
		Add 30 Seconds	2 & 12	Continuity
		Reheat	3 & 12	Continuity
		Light Timer	4 & 12	Continuity
		Control Setup	5 & 12	Continuity
		Kitchen Timer	7 & 12	Continuity
		Custom Program	1 & 13	Continuity
		Auto Defrost	2 & 13	Continuity
		Enter Start	3 & 13	Continuity
		Snacks	4 & 13	Continuity
		Kids Meals	5 & 13	Continuity
		Soften/Melt	6 & 13	Continuity
		Clock	7 & 13	Continuity
		Power Level	1 & 14	Continuity
		Stop/Clear	2 & 14	Continuity

Testing Procedures

WARNING

To avoid risk of electrical shock, personal injury or death; disconnect power to microwave oven and discharge the high voltage capacitor before servicing, unless testing requires power.

Component	Test Procedure	Results		
Touch Pad/Control Panel	Removal of Touch Pad/Control Panel is required to perform test. Check for continuity.	**Pad**	**Trace**	**Measurement**
		1	6 & 15	Continuity
		2	5 & 15	Continuity
		3	4 & 15	Continuity
		4	3 & 15	Continuity
JMV8208BA*	When touched: Less than 400 Ω. When not touched: More than 1 mega Ω.	5	2 & 15	Continuity
		6	1 & 15	Continuity
		7	7 & 14	Continuity
		8	6 & 14	Continuity
		9	5 & 14	Continuity
		0	7 & 15	Continuity
		Pizza Slice	1 & 10	Continuity
		Vegetables	2 & 10	Continuity
		Cook	3 & 10	Continuity
		5 Speed	6 & 10	Continuity
		On/Off	7 & 10	Continuity
		Baked Potato	4 & 11	Continuity
		Popcorn	5 & 11	Continuity
		Light Hi/Lo/Off	6 & 11	Continuity
		1 Pound Defrost	7 & 11	Continuity
		Delay Off	1 & 12	Continuity
		Add 30 Seconds	2 & 12	Continuity
		Reheat	3 & 12	Continuity
		Light Timer	4 & 12	Continuity
		Control Setup	5 & 12	Continuity
		Kitchen Timer	7 & 12	Continuity
		Option	9 & 12	Continuity
		Custom Program	1 & 13	Continuity
		Auto Defrost	2 & 13	Continuity
		Enter Start	3 & 13	Continuity
		Snacks	4 & 13	Continuity
		Kids Meals	5& 13	Continuity
		Soften/Melt	6 & 13	Continuity
		Clock	7 & 13	Continuity
		Power Level	1 & 14	Continuity
		Stop/Clear	2 & 14	Continuity

© 2006 Maytag Services

Testing Procedures

WARNING

To avoid risk of electrical shock, personal injury or death; disconnect power to microwave oven and discharge the high voltage capacitor before servicing, unless testing requires power.

Component	Test Procedure	Results		
Touch Panel/Control Panel ***AMV6167BD******	Removal of Touch Pad/Control Panel is required to perform test. Check for continuity. When touched: Less than 400 Ω. When not touched: More than 1 mega Ω.	**Pad**	**Trace**	**Measurement**
		0	5 & 13	Continuity
		1	6 & 12	Continuity
		2	5 & 12	Continuity
		3	4 & 12	Continuity
		4	3 & 12	Continuity
		5	2 & 12	Continuity
		6	9 & 13	Continuity
		7	8 & 13	Continuity
		8	7 & 13	Continuity
		9	6 & 13	Continuity
		Control Setup	2 & 10	Continuity
		Pizza Slice	3 & 10	Continuity
		Baked Potato	4 & 10	Continuity
		Popcorn	5 & 10	Continuity
		Combination Cooking	6 & 10	Continuity
		Convection	8 & 10	Continuity
		Clock	2 & 11	Continuity
		Micro. Convection	4 & 11	Continuity
		Auto Cook	6 & 11	Continuity
		Auto Defrost	7 & 11	Continuity
		Reheat	8 & 11	Continuity
		Sensor Cook	9 & 11	Continuity
		Option	1 & 12	Continuity
		Snacks	8 & 12	Continuity
		Soften/Melt	9 & 12	Continuity
		Stop/Clear	2 & 13	Continuity
		Enter/Start	3 & 13	Continuity
		Power Level	4 & 13	Continuity
		Kitchen Timer	2 & 14	Continuity
		Delay Off	3 & 14	Continuity
		5 Speed	4 & 14	Continuity
		On/Off	5 & 14	Continuity
		Light Timer	6 & 14	Continuity
		Light Hi/Lo/Off	7 & 14	Continuity
		Turntable On/Off	8 & 14	Continuity
		Add 30 Seconds	9 & 14	Continuity

Testing Procedures

WARNING

To avoid risk of electrical shock, personal injury or death; disconnect power to microwave oven and discharge the high voltage capacitor before servicing, unless testing requires power.

Component	Test Procedure	Results		
Touch Panel/Control Panel ***JMV8166BA****	Removal of Touch Pad/Control Panel is required to perform test. Check for continuity. When touched: Less than 400 Ω. When not touched: More than 1 mega Ω.	**Pad**	**Trace**	**Measurement**
		0	5 & 13	Continuity
		1	6 & 12	Continuity
		2	5 & 12	Continuity
		3	4 & 12	Continuity
		4	3 & 12	Continuity
		5	2 & 12	Continuity
		6	9 & 13	Continuity
		7	8 & 13	Continuity
		8	7 & 13	Continuity
		9	6 & 13	Continuity
		Control Setup	2 & 10	Continuity
		Pizza Slice	3 & 10	Continuity
		Baked Potato	4 & 10	Continuity
		Popcorn	5 & 10	Continuity
		Combination Cooking	6 & 10	Continuity
		Convection	8 & 10	Continuity
		Clock	2 & 11	Continuity
		Micro. Convection	4 & 11	Continuity
		Auto Cook	6 & 11	Continuity
		Auto Defrost	7 & 11	Continuity
		Reheat	8 & 11	Continuity
		Sensor Cook	9 & 11	Continuity
		Option	1 & 11	Continuity
		Snacks	8 & 12	Continuity
		Soften/Melt	9 & 12	Continuity
		Stop/Clear	2 & 13	Continuity
		Enter/Start	3 & 13	Continuity
		Power Level	4 & 13	Continuity
		Kitchen Timer	2 & 14	Continuity
		Delay Off	3 & 14	Continuity
		5 Speed	4 & 14	Continuity
		On/Off	5 & 14	Continuity
		Light Timer	6 & 14	Continuity
		Light Hi/Lo/Off	7 & 14	Continuity
		Turntable On/Off	8 & 14	Continuity
		Add 30 Seconds	9 & 14	Continuity

© 2006 Maytag Services

Testing Procedures

WARNING

To avoid risk of electrical shock, personal injury or death; disconnect power to microwave oven and discharge the high voltage capacitor before servicing, unless testing requires power.

Component	Test Procedure	Results		
Touch Panel/Control Panel ***JMV9169BA******	Removal of Touch Pad/Control Panel is required to perform test. Check for continuity. When touched: Less than 400 Ω. When not touched: More than 1 mega Ω.	**Pad**	**Trace**	**Measurement**
		0	5 & 13	Continuity
		1	6 & 12	Continuity
		2	5 & 12	Continuity
		3	4 & 12	Continuity
		4	3 & 12	Continuity
		5	2 & 12	Continuity
		6	9 & 13	Continuity
		7	8 & 13	Continuity
		8	7 & 13	Continuity
		9	6 & 13	Continuity
		Control Setup	2 & 10	Continuity
		Pizza Slice	3 & 10	Continuity
		Baked Potato	4 & 10	Continuity
		Popcorn	5 & 10	Continuity
		Combination Cooking	6 & 10	Continuity
		Broil	7 & 10	Continuity
		Convection	8 & 10	Continuity
		Clock	2 & 11	Continuity
		Auto Broil	3 & 11	Continuity
		Micro. Convection	4 & 11	Continuity
		Auto Cook	6 & 11	Continuity
		Auto Defrost	7 & 11	Continuity
		Reheat	8 & 11	Continuity
		Sensor Cook	9 & 11	Continuity
		Snacks	8 & 12	Continuity
		Soften/Melt	9 & 12	Continuity
		Stop/Clear	2 & 13	Continuity
		Enter/Start	3 & 13	Continuity
		Power Level	4 & 13	Continuity
		Kitchen Timer	2 & 14	Continuity
		Delay Off	3 & 14	Continuity
		5 Speed	4 & 14	Continuity
		On/Off	5 & 14	Continuity
		Light Timer	6 & 14	Continuity
		Light Hi/Lo/Off	7 & 14	Continuity
		Turntable On/Off	8 & 14	Continuity
		Add 30 Seconds	9 & 14	Continuity

Testing Procedures

WARNING

To avoid risk of electrical shock, personal injury or death; disconnect power to microwave oven and discharge the high voltage capacitor before servicing, unless testing requires power.

Component	Test Procedure	Results		
Touch Pad/Control Panel	Removal of Touch Pad/Control Panel is required to perform test. Check for continuity.	**Pad**	**Trace**	**Measurement**
		1	8 & 16	Continuity
		2	7 & 16	Continuity
		3	6 & 16	Continuity
		4	5 & 16	Continuity
AMV5164BC*	When touched: Less than 400 Ω. When not touched: More than 1 mega Ω.	5	4 & 16	Continuity
		6	3 & 16	Continuity
		7	9 & 15	Continuity
		8	8 & 15	Continuity
		9	7 & 15	Continuity
		0	9 & 16	Continuity
		Vegetables	8 & 10	Continuity
		Cook	9 & 10	Continuity
		Pizza Slice	3 & 11	Continuity
		Option	2 & 12	Continuity
		Baked Potato	6 & 12	Continuity
		Popcorn	7 & 12	Continuity
		Light Hi/Lo/Off	8 & 12	Continuity
		1 Pound Defrost	9 & 12	Continuity
		Add 30 Seconds	4 & 13	Continuity
		Reheat	5 & 13	Continuity
		Light Timer	6 & 13	Continuity
		Control Setup	7 & 13	Continuity
		Turntable On/Off	8 & 13	Continuity
		Kitchen Timer	9 & 13	Continuity
		Custom Program	3 & 14	Continuity
		Auto Defrost	4 & 14	Continuity
		Enter/Start	5 & 14	Continuity
		Clock	9 & 14	Continuity
		Power Level	3 & 15	Continuity
		Stop/Clear	4 & 15	Continuity
		Vent Hi/Lo/Off	6 & 15	Continuity

© 2006 Maytag Services

Testing Procedures

WARNING

To avoid risk of electrical shock, personal injury or death; disconnect power to microwave oven and discharge the high voltage capacitor before servicing, unless testing requires power.

Component	Test Procedure	Results		
Touch Pad/Control Panel	Removal of Touch Pad/Control Panel is required to perform test. Check for continuity.	**Pad**	**Trace**	**Measurement**
		1	6 & 15	Continuity
		2	5 & 15	Continuity
		3	4 & 15	Continuity
		4	3 & 15	Continuity
MMV5207BC*	When touched: Less than 400 Ω.	5	2 & 15	Continuity
		6	1 & 15	Continuity
	When not touched: More than 1 mega Ω.	7	7 & 14	Continuity
		8	6 & 14	Continuity
		9	5 & 14	Continuity
		0	7 & 15	Continuity
		Pizza Slice	1 & 10	Continuity
		Vegetables	2 & 10	Continuity
		Cook	3 & 10	Continuity
		5 Speed	6 & 10	Continuity
		On/Off	7 & 10	Continuity
		Baked Potato	4 & 11	Continuity
		Popcorn	5 & 11	Continuity
		Light Hi/Lo/Off	6 & 11	Continuity
		1 Pound Defrost	7 & 11	Continuity
		Delay Off	1 & 12	Continuity
		Add 30 Seconds	2 & 12	Continuity
		Reheat	3 & 12	Continuity
		Light Timer	4 & 12	Continuity
		Control Setup	5 & 12	Continuity
		Kitchen Timer	7 & 12	Continuity
		Custom Program	1 & 13	Continuity
		Auto Defrost	2 & 13	Continuity
		Enter Start	3 & 13	Continuity
		Snacks	4 & 13	Continuity
		Kids Meals	5& 13	Continuity
		Soften/Melt	6 & 13	Continuity
		Clock	7 & 13	Continuity
		Option	9 & 13	Continuity
		Power Level	1 & 14	Continuity
		Stop/Clear	2 & 14	Continuity

Testing Procedures

WARNING

To avoid risk of electrical shock, personal injury or death; disconnect power to microwave oven and discharge the high voltage capacitor before servicing, unless testing requires power.

Component	Test Procedure	Results		
Touch Pad/Control Panel	Removal of Touch Pad/Control Panel is required to perform test. Check for continuity.	**Pad**	**Trace**	**Measurement**
		1	6 & 15	Continuity
		2	5 & 15	Continuity
		3	4 & 15	Continuity
		4	3 & 15	Continuity
JMV8208BC*	When touched: Less than 400 Ω.	5	2 & 15	Continuity
		6	1 & 15	Continuity
	When not touched: More than 1 mega Ω.	7	7 & 14	Continuity
		8	6 & 14	Continuity
		9	5 & 14	Continuity
		0	7 & 15	Continuity
		Pizza Slice	1 & 10	Continuity
		Vegetables	2 & 10	Continuity
		Cook	3 & 10	Continuity
		5 Speed	6 & 10	Continuity
		On/Off	7 & 10	Continuity
		Baked Potato	4 & 11	Continuity
		Popcorn	5 & 11	Continuity
		Light Hi/Lo/Off	6 & 11	Continuity
		1 Pound Defrost	7 & 11	Continuity
		Delay Off	1 & 12	Continuity
		Add 30 Seconds	2 & 12	Continuity
		Reheat	3 & 12	Continuity
		Light Timer	4 & 12	Continuity
		Control Setup	5 & 12	Continuity
		Kitchen Timer	7 & 12	Continuity
		Custom Program	1 & 13	Continuity
		Auto Defrost	2 & 13	Continuity
		Enter Start	3 & 13	Continuity
		Snacks	4 & 13	Continuity
		Kids Meals	5& 13	Continuity
		Soften/Melt	6 & 13	Continuity
		Clock	7 & 13	Continuity
		Power Level	1 & 14	Continuity
		Stop/Clear	2 & 14	Continuity
		Option	9 & 15	Continuity

© 2006 Maytag Services

Disassembly Procedures

WARNING

To avoid risk of electrical shock, personal injury or death; disconnect power to microwave oven and discharge the high voltage capacitor before performing any disassembly procedures.

High voltage is present at the high voltage terminal of the high voltage transformer during any cooking cycle.

It is neither necessary or advisable to attempt measurement of the high voltage.

Before touching any oven components or wiring, always unplug the oven from its power source and discharge capacitor.

Grille Removal

The top full-width grille is removable for service to some components, such as: humidity sensor, oven light, door removal, flame sensor, vent motor capacitor, fuse, control panel, and stirrer motor (some models).

Grille Removal

1. Disconnect power to oven.
2. Remove screws located in front on top of microwave securing grille.

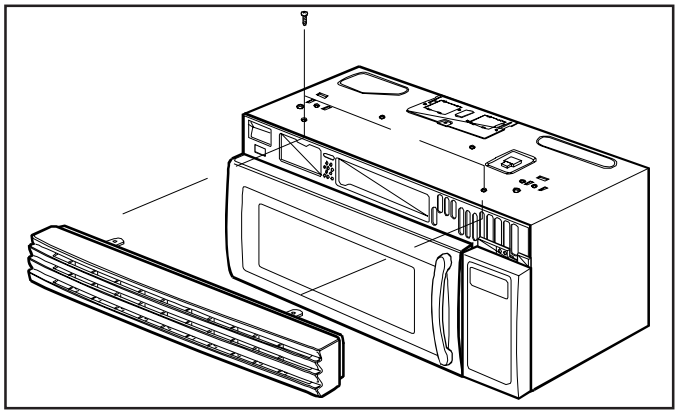

3. Pull outward on the top portion of the grille releasing the tabs.
4. Reassemble in reverse order.

Door Assembly Removal

CAUTION

A microwave leakage test must be performed anytime a door assembly is removed, replaced, disassembled or adjusted for any reason.

Door Removal

1. Disconnect power to oven and remove grille, see "Grille Removal" procedure.
2. Open the oven door, slowly raise the door evenly, disengaging the pins at the top and bottom.

NOTE: When aligning the door for assembly, the door must be opened as much as possible.

3. To place door back on unit, place bottom pin into hole first and then align the top pin. Once pins are aligned push door downward to lock into place.
4. Replace front grille to complete assembly.

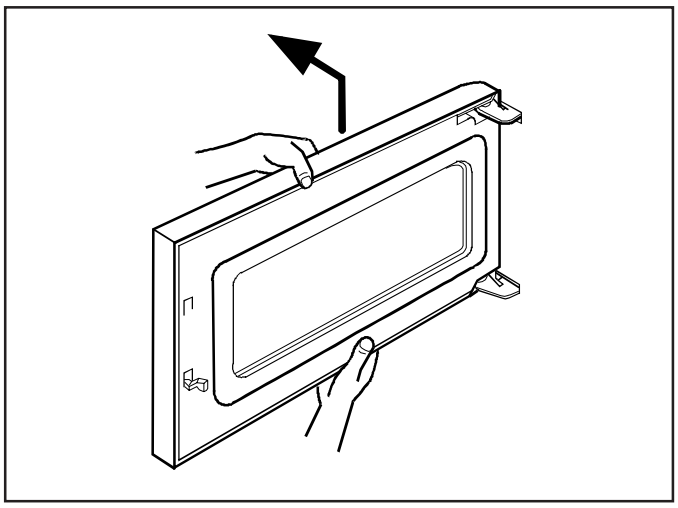

Door Disassembly

1. Disconnect power to oven and remove oven door, see "Door Removal" procedure.
2. Pry away choke cover, by placing a tool in the upper right corner of the door and gently prying outward on the choke cover. Continue to work around the door casing until choke cover is completely loose.

CAUTION

To avoid property damage, care must be taken when prying choke cover from oven door.

3. Slide latch assembly upward and to the left to release plastic tabs from door frame. Once latch assembly is loose the spring may be disconnected from the door frame.
4. Remove screws securing door frame assembly to door panel.
5. Remove door frame assembly by releasing tabs around entire door panel.
6. Remove door handle by removing screws securing handle to door panel.

NOTE: The door handle can only be reinstalled by guiding the top and bottom insertion points into the correct receiving slots. It is impossible to reinstall the door handle "upside-down."

7. Remove door glass by releasing tab securing door glass baffle. Remove baffle, then slide door glass to the right slightly, then push the door glass upward to release the glass from the track.
8. Reassemble in reverse order.

Disassembly Procedures

WARNING

To avoid risk of electrical shock, personal injury or death; disconnect power to microwave oven and discharge the high voltage capacitor before performing any disassembly procedures.

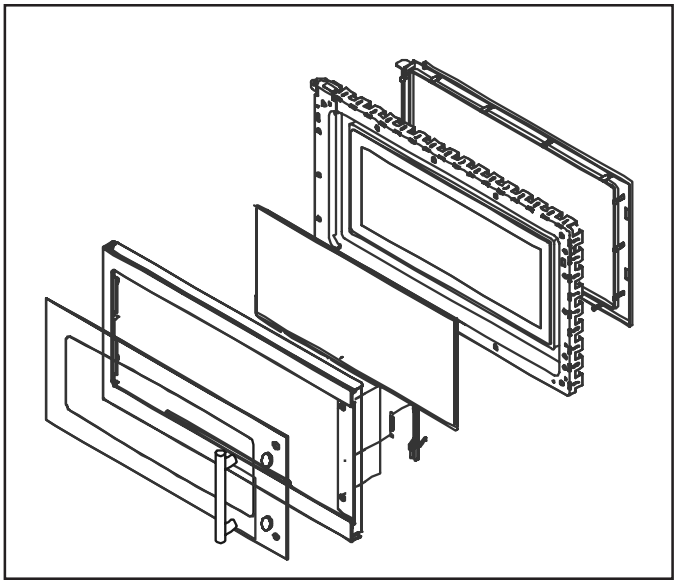

CAUTION

A microwave leakage test must be performed anytime a door assembly is removed, replaced, disassembled, or adjusted for any reason.

Control Panel Removal

The control panel is made up of several components, such as a printed circuit board and touch panel.

1. Disconnect oven power and remove grille, see "Grille Removal" procedure.
2. Remove screw located at the top of touch panel. Lift control panel up and out to release bottom tab connections.
3. Place control panel on a flat surface.
4. Reassemble in reverse order.

Control Panel/Switch Membrane Disassembly

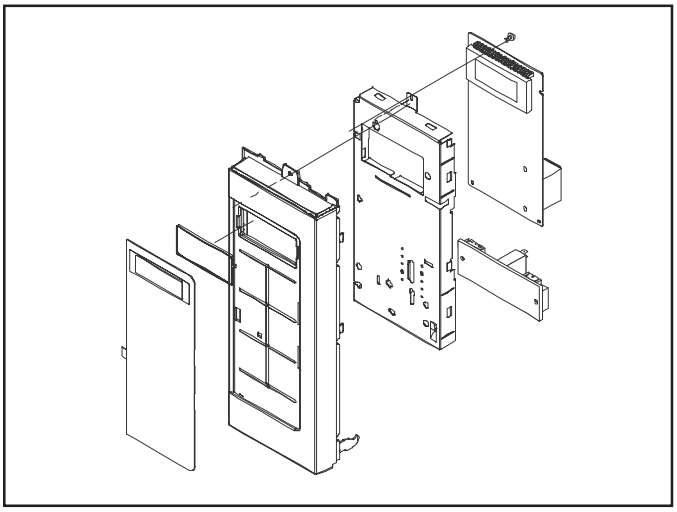

Printed Circuit Board Removal

The circuit board is located at the top on back of the control panel.

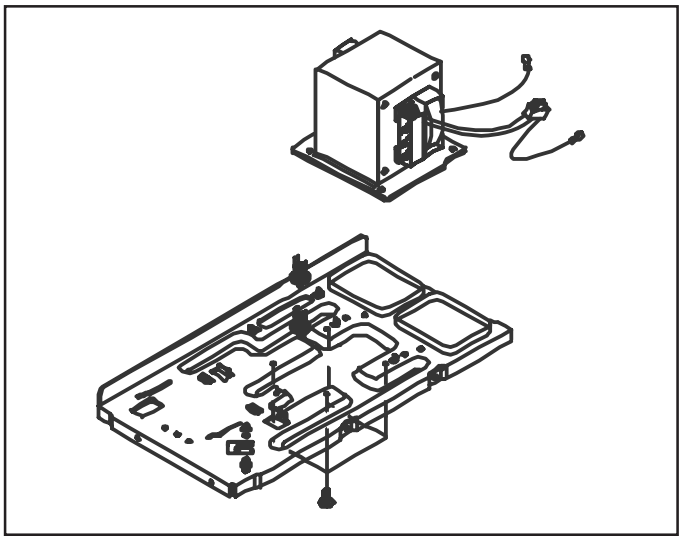

P.C. Board Removal

1. Disconnect oven power and remove grille, see "Grille Removal" procedure.
2. Remove control panel, see "Control Panel Removal" procedure.
3. Discharge high voltage capacitor, see "High Voltage Capacitor Removal" procedure.
4. Disconnect ribbon connector by sliding top part of connector upward. Once in released position remove ribbon from connector by siding ribbon side-to-side.

NOTE: Caution should be used when removing cable from connector. Ribbon cable has two holes which connector locks ribbon in place.

5. Disconnect and mark the wire connectors from circuit board.
6. Remove screws securing circuit board to control panel assembly.
7. Reassemble in reverse order.

NOTE: Do not flex circuit board.

© 2006 Maytag Services

Disassembly Procedures

WARNING

To avoid risk of electrical shock, personal injury or death; disconnect power to microwave oven and discharge the high voltage capacitor before performing any disassembly procedures.

Control Key Panel Removal

The key panel has one ribbon connection on the circuit board.

The key panel pads can be checked through a continuity test. Operations of key pad can be checked by measuring connections at end of ribbon, using high ohms scale.

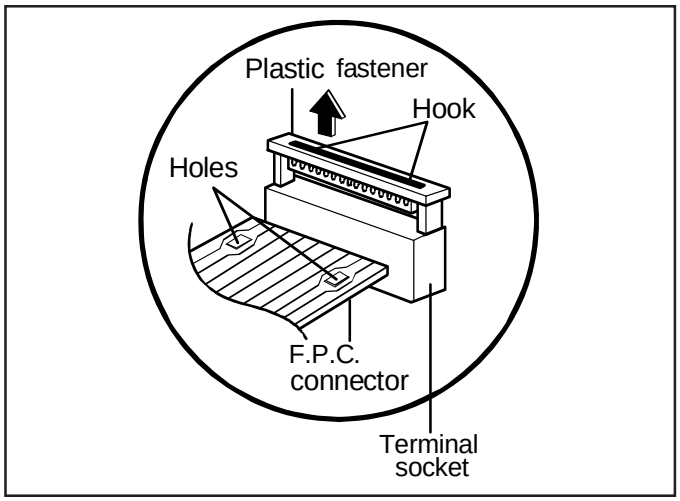

Control Key Panel Removal

1. Disconnect power to microwave oven.
2. Remove control panel, see "Control Panel Removal" procedure.
3. Discharge high voltage capacitor, see "High Voltage Capacitor Removal" procedure.
4. Disconnect ribbon connector by sliding top part of connector upward. Once in released position remove ribbon from connector by sliding ribbon side-to-side.

NOTE: Caution should be used when removing cable from connector. Ribbon cable has two holes which connector locks ribbon in place.

5. Peel failed key pad off and replace with new key pad.
6. Reassemble in reverse order.

Outer Case Removal

NOTE: This procedure requires removal of unit.

1. Disconnect power to oven and remove grille, see "Grille Removal" procedure.
2. Remove oven door see "Door Removal" procedure.
3. Remove screws securing air duct to outer case.
4. Remove screws securing outer case to chassis.
5. Remove screws securing vent plate to outer case.
6. Remove screw securing power cord cover to outer case and remove power cord cover (if equipped).
7. Slide outer case towards the rear of the unit, guide power cord though outer case power cord hole.
8. Place outer case in a safe location.
9. Reassemble in reverse order.

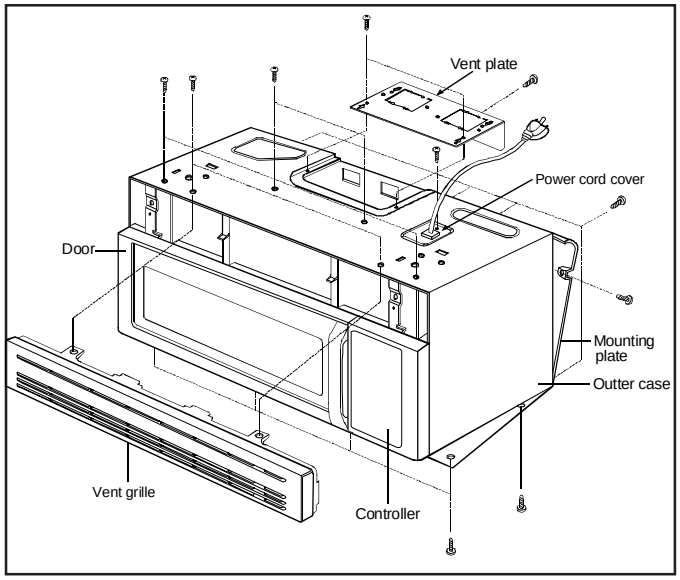

Stirrer Assembly Removal

Motor driven antenna assembly is located at the top of the cavity, using a top feed wave guide.

Stirrer Blade Removal

1. Disconnect power to oven and open the oven door.
2. Carefully pry downward on the plastic rivets securing the stirrer cover.
3. Rotate slightly and pull down on stirrer fan cover .
4. Reassemble in reverse order.

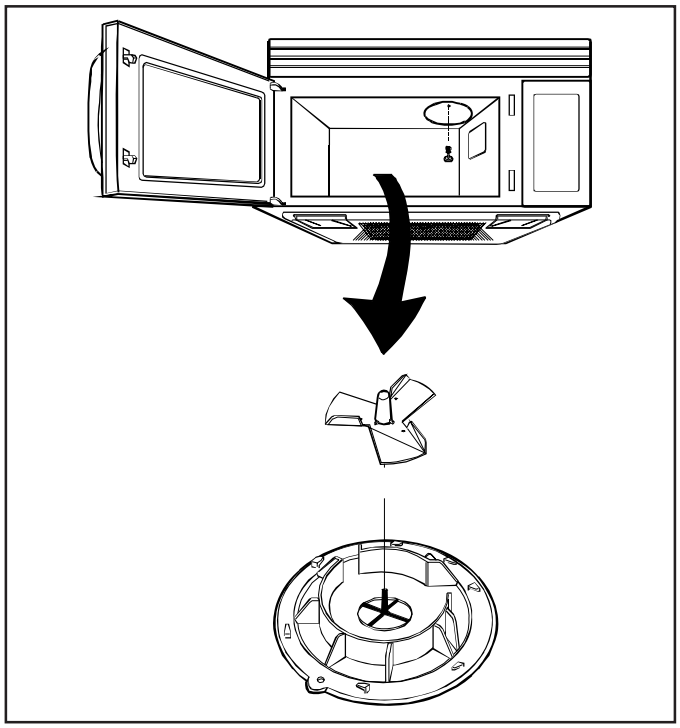

WARNING

To avoid risk of electrical shock, personal injury or death; disconnect power to microwave oven and discharge the high voltage capacitor before performing any disassembly procedures.

Interlock Door Latch Switches Removal

Primary switch is operated by the top latch pawl.

Interlock Switch Removal

1. Disconnect power to oven and remove control panel, see "Control Panel Removal" procedure.
2. Discharge high voltage capacitor, see "High Voltage Capacitor Removal" procedure.
3. Test interlock switches before removing, see Testing Procedures.
4. Disconnect and label wire connections.
5. Remove interlock switch.

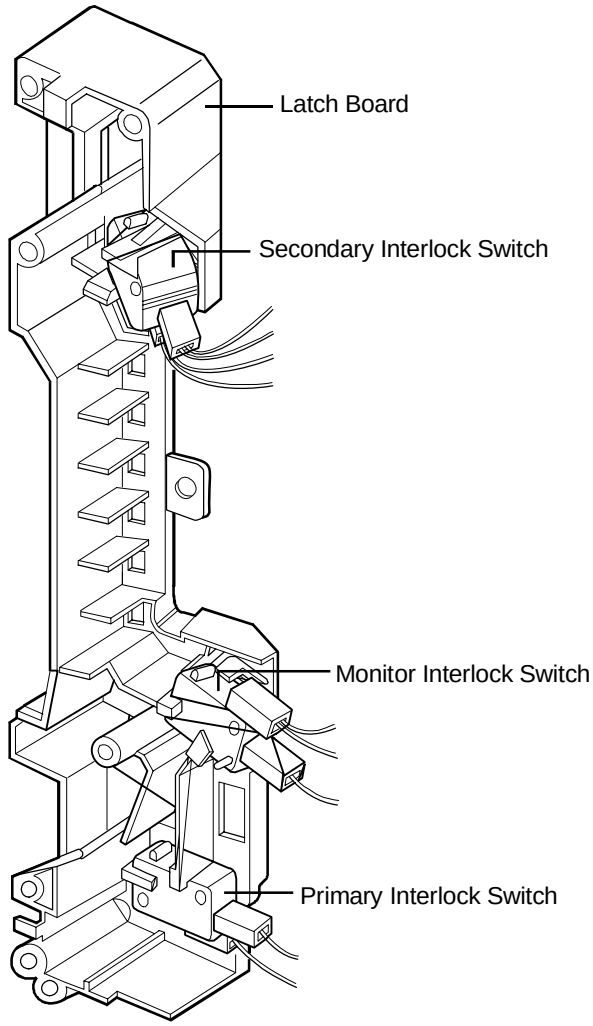

CAUTION

Before replacing a blown monitor fuse, test the primary interlock switch, secondary interlock switch, monitor switch, and power relay contacts for proper operation. If the monitor fuse is blown by a failed switch operation, all switches and printed circuit board must be replaced.

Adjusting Interlocks

The interlock monitor and primary switches act as a final safety switch, protecting the operator from microwave energy. After adjusting the interlock switches, verify connections are correctly connected.

For door fit and switch operation, switch housing is adjustable.

1. Disconnect power to oven and remove control panel, see "Control Panel Removal" procedure.
2. Discharge high voltage capacitor, see "High Voltage Capacitor Removal" procedure.
3. Loosen switch housing mounting screws on vertical flange.
4. Close oven door, move latch board upward toward the top of the oven and/or away from the door latch until gaps are less than 1/64–inch (0.5 mm).
5. Hold latch board securely for proper switch operation and door fit, retighten screws.
6. Open the oven door slowly, watching the switches. Verify switches release in the following order.
   - Primary interlock switch
   - Secondary interlock switch
   - Monitor interlock switch

NOTE: Adjust the latch board until all switches operate in proper sequence.

7. Close the oven door slowly, watching the switches. Verify switches active in the following order.
   - Monitor interlock switch
   - Secondary interlock switch
   - Primary interlock switch
8. When proper sequence of switch has been achieved, tighten the latch board securely.

CAUTION

A microwave leakage test must be preformed anytime a door assembly is removed, replaced, disassembled or adjustment of latch board is made.

 © 2006 Maytag Services

Disassembly Procedures

WARNING

To avoid risk of electrical shock, personal injury or death; disconnect power to microwave oven and discharge the high voltage capacitor before performing any disassembly procedures.

High Voltage Capacitor Removal

High voltage capacitor should always be discharged by shorting a terminal to a chassis ground. The capacitor has a internal "shunt" resistor, but the mechanical discharge should always be performed to avoid personal injury.

High Voltage Capacitor Removal

1. Disconnect power to oven and remove control panel, see "Control Panel Removal" procedure.
2. Discharge high voltage capacitor by connecting a jumper wire to the terminal of high voltage capacitor with the diode connected to it. Connect the other end of the jumper wire to a well insulated screwdriver and touch a nearby chassis ground screw.
3. Remove screws that secure capacitor and diode.
4. Slide capacitor mounting bracket out of the slots and pull outward on capacitor, diode and bracket.
5. Reassemble in reverse order.

Diode Removal

The diode is located next to the high voltage capacitor.

1. Disconnect power to oven and remove control panel, see "Control Panel Removal" procedure.
2. Discharge high voltage capacitor, see "High Voltage Capacitor Removal" procedure.
3. Disconnect diode wire terminal from high voltage capacitor and remove screw securing diode to ground.
4. Reassemble in reverse order.

Transformer Removal

High voltage transformer can be serviced through the front of the unit.

Transformer Removal

1. Disconnect power to oven and remove control panel, see "Control Panel Removal" procedure.
2. Discharge high voltage capacitor, see "High Voltage Capacitor Removal" procedure.
3. Disconnect and label wire leads from transformer.
4. Remove screws securing transformer and remove out through the front.
5. Reassemble in reverse order.

Replacing Fuse

The fuse is located behind the grille in line with the power cord on the right side of the unit.

Fuse Removal

1. Disconnect power and remove grille, see "Grille Removal" procedure.
2. Remove and replace fuse and reassemble in reverse order.

CAUTION

Before replacing a blown monitor fuse, test the primary interlock switch, secondary interlock switch, monitor switch, and power relay contacts for proper operation. If the monitor fuse is blown by a failed switch operation, all switches and printed circuit board must be replaced.

Magnetron Removal

Magnetron is mounted on the side of the cavity to provide a top feed single waveguide.

1. Disconnect power to oven and remove grille, see "Grille Removal" procedure.
2. Remove control panel, see "Control Panel Removal" procedure.
3. Remove outer case, see "Outer Case Removal" procedure.
4. Discharge high voltage capacitor, see "High Voltage Capacitor Removal" procedure.
5. Remove screws securing magnetron to wave guide.
6. Carefully remove the magnetron.
7. Reassemble in reverse order.

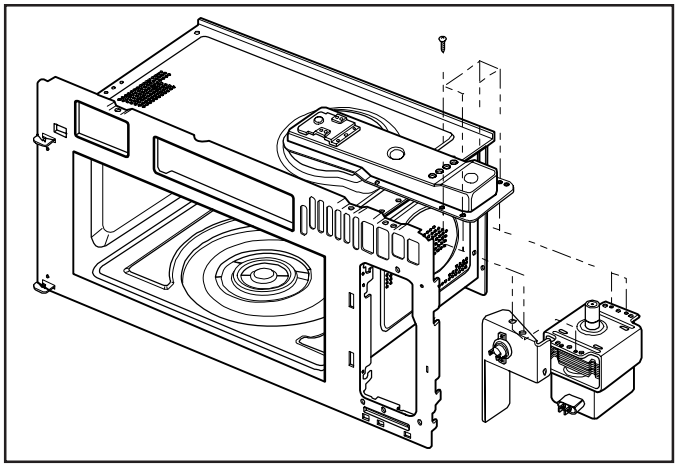

NOTE: When replacing the magnetron, make sure the gasket is in the correct position and in good condition.

CAUTION

During replacement of magnetron, be certain the R.F. anode gasket is in place around anode stud.

Disassembly Procedures

WARNING

To avoid risk of electrical shock, personal injury or death; disconnect power to microwave oven and discharge the high voltage capacitor before performing any disassembly procedures.

WARNING

A microwave leakage test must be performed anytime a magnetron assembly is removed, replaced, disassembled or adjusted for any reason.

Magnetron Fan Assembly Removal

Magnetron fan motor provides cool air circulation from an external air source, which provides direct cool air through air vanes surrounding the magnetron. This assembly is located above the magnetron.

1. Follow steps 1 through 5 of "Magnetron Removal" procedure.
2. Remove fan blade from fan motor.
3. Remove screws securing fan motor to air duct.
4. Label and disconnect wires from fan motor and lift assembly out.
5. Reassemble in reverse order.

Magnetron Thermal Fuse Removal

NOTE: Thermal fuse is not resettable.

1. Disconnect power to oven and remove control panel, see "Control Panel Removal" procedure.
2. Discharge high voltage capacitor, see "High Voltage Capacitor Removal" procedure.
3. Remove outer case, see "Outer Case Removal" procedure.
4. Label and disconnect wire terminals.
5. Remove screw securing thermal fuse to cooling fan.
6. Replace and reassemble in reverse order.

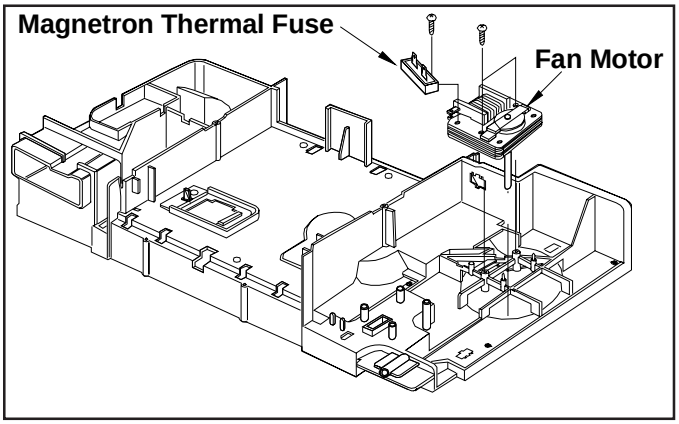

Humidity Sensor Removal (Select Models)

The sensor is a plug-in device located in the air exhaust duct.

1. Disconnect power to oven and remove control panel, see "Control Panel Removal" procedure.
2. Discharge high voltage capacitor, see "High Voltage Capacitor Removal" procedure.
3. Remove outer case, see "Outer Case Removal" procedure.
4. Remove screws securing sensor to air duct.
5. Disconnect wire terminal; replace with new sensor.
6. Reassemble in reverse order.

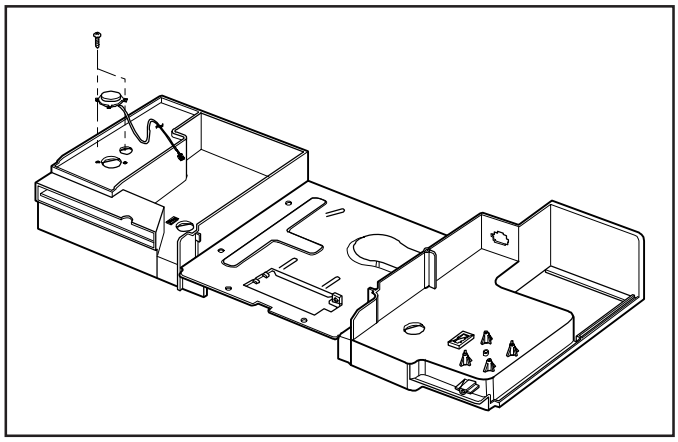

Oven Thermostat Removal

The oven thermostat is on the air duct assembly.

The thermostat is a resettable thermostat.

1. Disconnect power to oven and remove control panel, see "Control Panel Removal" procedure.
2. Discharge high voltage capacitor, see "High Voltage Capacitor Removal" procedure.
3. Remove outer case, see "Outer Case Removal" procedure.
4. Disconnect wire terminals from oven thermostat.

NOTE: Lift upward on left rear corner of air duct to release oven thermostat.

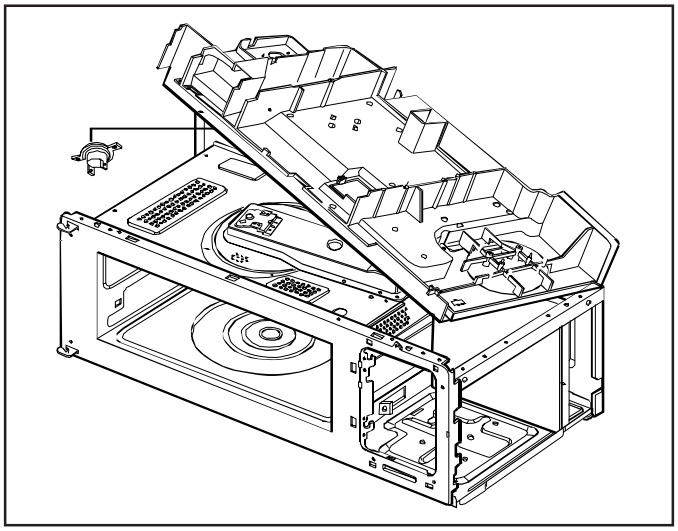

 © 2006 Maytag Services

Disassembly Procedures

WARNING

To avoid risk of electrical shock, personal injury or death; disconnect power to microwave oven and discharge the high voltage capacitor before performing any disassembly procedures.

Turntable Motor Removal

1. Disconnect power to oven.
2. Remove screws securing bottom plate cover.

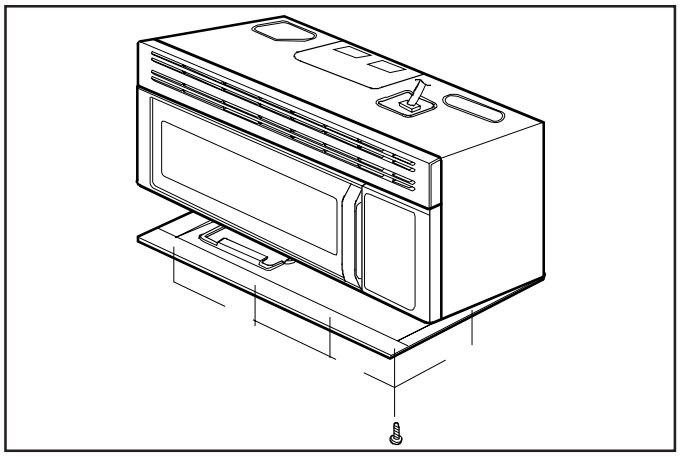

3. Open the oven door, remove turntable, and gently pry upward on turntable shaft.
4. Disconnect wire leads from turntable motor.

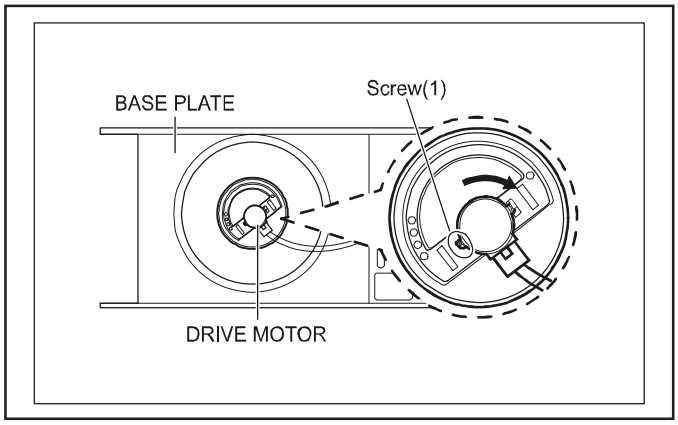

5. Remove screws securing turntable to the oven cavity.
6. Replace and reassemble in reverse order.

Vent Blower Removal

Vent blower is a five speed capacitor run blower assembly located on top of the oven. The blower is operated by voltage relays located on the circuit board.

Vent Exhaust Blower Removal

1. Disconnect power to unit and remove unit from its installation.
2. Remove screws securing damper and motor assembly to top and back of unit.
3. Remove damper.
4. Lift blower assembly out and disconnect wire connection wire terminal.
5. Reassemble in reverse order.

NOTE: Place blower assembly wires in slotted area to avoid pinching of wires.

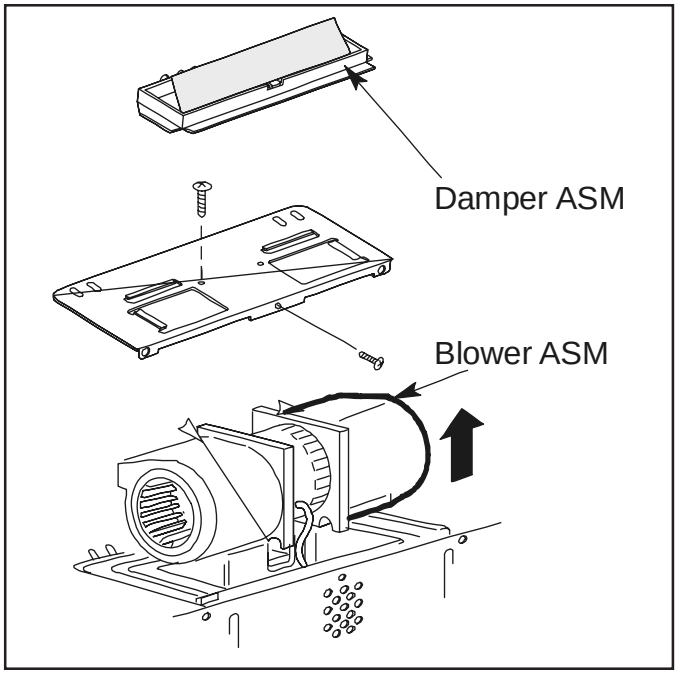

Disassembly Procedures

WARNING

To avoid risk of electrical shock, personal injury or death; disconnect power to microwave oven and discharge the high voltage capacitor before performing any disassembly procedures.

Convection Motor and Heater Element Removal (Select Models)

1. Disconnect power to oven.
2. Discharge high voltage capacitor, see "High Voltage Capacitor Removal" procedure.
3. Remove outer case, see "Outer Case Removal" procedure.
4. Remove screws securing back cover and pull the top of back cover downward, sliding right side metal tab from oven cavity.
5. Remove screws securing air duct to chassis and other components.
6. Label and disconnect wire leads from air duct.
7. Remove magnetron see "Magnetron Removal" procedure.
8. Remove screws securing bottom plate to chassis.
9. Disconnect wire leads from convection chamber.
10. Remove screws securing convection chamber assembly and lift assembly from oven cavity.
11. Slide inner convection fan blade off convection motor shaft.
12. Remove nuts securing convection motor to bracket.
13. Replace and reassembly in reverse order.

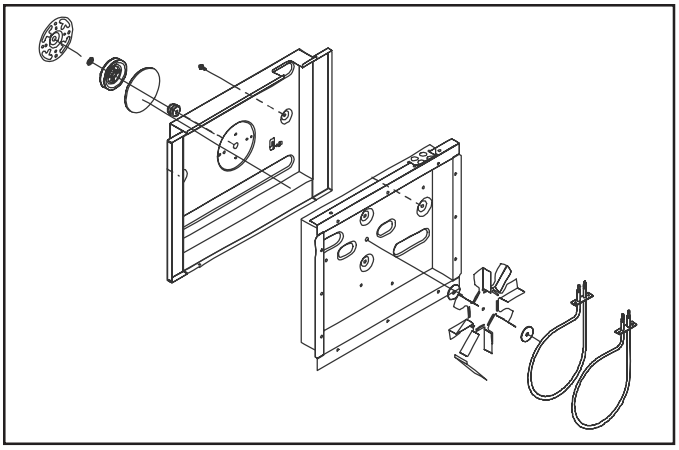

Convection Heater Element Removal (Select Models)

1. See “Convection Motor Removal;" perform steps 1 through 9.
2. Remove screws at and next to terminals securing wires and element to heater box.
3. Release metal clip securing element to heater box.
4. Remove element from heater box.
5. Replace and reassembly in reverse order.

Light Socket Removal

1. Disconnect power to oven.
2. Remove Grille, see "Grille Removal" procedure.
3. Remove screws securing bulb holder.
4. Remove light bulb and socket.
5. Disconnect wire terminal plug.
6. Replace and reassemble in reverse order.

Grille Heater Element Removal (Select Models)

1. Disconnect power to oven.
2. Discharge high voltage capacitor, see "High Voltage Capacitor Removal" procedure.
3. Remove outer case, see "Outer Case Removal" procedure.
4. Remove screws securing back cover and pull the top of back cover downward sliding metal tab on right side from oven cavity.
5. Remove screws securing air duct to chassis and other components.
6. Disconnect wire leads from air duct.
7. Remove screw securing upper insulator.
8. Remove screws securing the heater terminal and heater barrier.
9. Remove screws securing the heater holding bracket.
10. Remove grille heater from cavity.
11. Replace and reassembly in reverse order.

© 2006 Maytag Services

Appendix A

The Installation information provided in this service manual is representative of a limited number of models. Reference the customer's Installation literature included with the product, order a copy (if needed), or consult the appropriate website for the specific model.

www.maytag.com or www.amana.com or www.jennair.com

Installation Instructions

Over the Range Microwave Oven

BEFORE YOU BEGIN

Read these instructions completely and carefully.

- **IMPORTANT –** Save these instructions for local inspector's use.
- **IMPORTANT –** Observe all governing codes and ordinances.
- **Note to Installer –** Be sure to leave these instructions with the Consumer.
- **Note to Consumer –** Keep these instructions for future reference.
- **Skill level –** Installation of this appliance requires basic mechanical and electrical skills.
- Proper installation is the responsibility of the installer.
- Product failure due to improper installation is not covered under the Warranty.

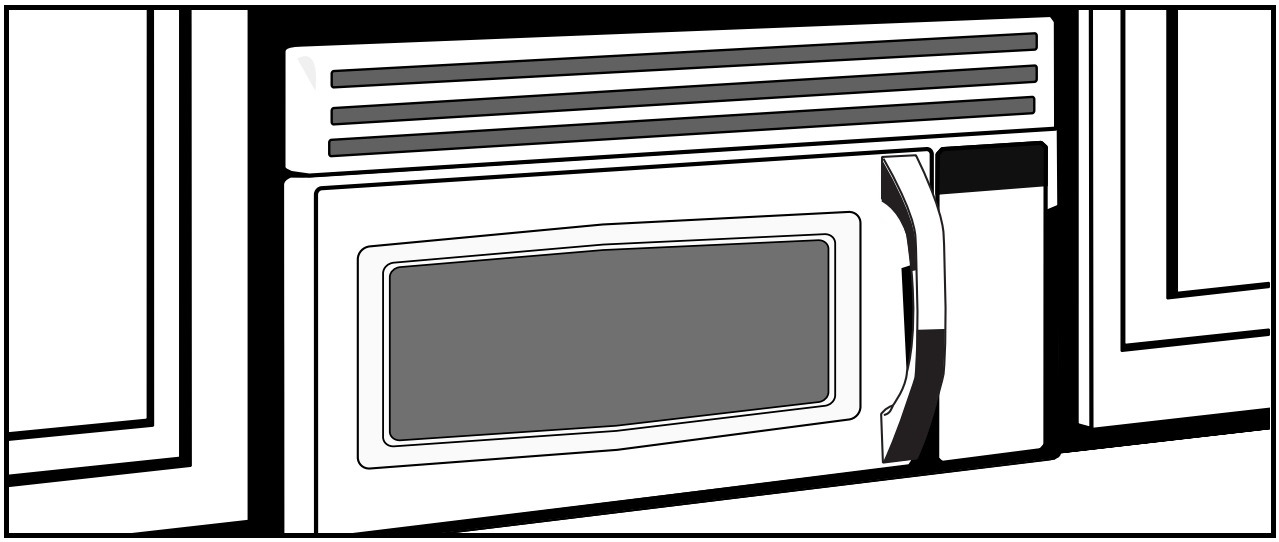

READ CAREFULLY. KEEP THESE INSTRUCTIONS.

 © 2006 Maytag Services

Installation Instructions

CONTENTS

General information

Important Safety Instructions 3
Electrical Requirements 3
Hood Exhaust 4, 5
Damage – Shipment/Installation 6
Parts Included.....6
Tools You Will Need.....7
Mounting Space.....7

Step-by-step installation guide

Placement of Mounting Plate 8–10
Removing the Mounting Plate 8
Finding the Wall Studs 8
Determining Wall Plate Location 9
Aligning the Wall Plate 10

Installation Types 11–21
A Recirculating 12–13
Attach Mounting Plate to Wall 12
Preparation of Top Cabinet 12
Mount the Microwave Oven..... 13

B Outside Top Exhaust 14–17
Attach Mounting Plate to Wall 14
Preparation of Top Cabinet 15
Adjust Blower 15
Check Damper Operation..... 16
Mount Microwave Oven..... 16
Adjust Exhaust Adaptor..... 17
Connecting Ductwork 17

C Outside Back Exhaust..... 18–21
Preparing Rear Wall 18
Attach Mounting Plate to Wall 18, 19
Preparation of Top Cabinet 19
Adjust Blower 19, 20
Mount the Microwave Oven..... 20, 21

© 2006 Maytag Services

IMPORTANT SAFETY INSTRUCTIONS

This product requires a three-prong grounded outlet. The installer must perform a ground continuity check on the power outlet box before beginning the installation to insure that the outlet box is properly grounded. If not properly grounded, or if the outlet box does not meet electrical requirements noted (under ELECTRICAL REQUIREMENTS), a qualified electrician should be employed to correct any deficiencies.

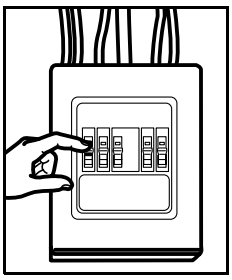

CAUTION: For personal safety, remove house fuse or open circuit breaker before beginning installation to avoid severe or fatal shock injury.

CAUTION: For personal safety, the mounting surface must be capable of supporting the cabinet load, in addition to the added weight of this 59 pound product, plus additional oven loads of up to 50 pounds or a total weight of 109 pounds.

CAUTION: For personal safety, this product cannot be installed in cabinet arrangements such as an island or a peninsula. It must be mounted to BOTH a top cabinet AND a wall.

NOTE: For easier installation and personal safety, it is recommended that two people install this product.

IMPORTANT–PLEASE READ CAREFULLY. FOR PERSONAL SAFETY, THIS APPLIANCE MUST BE PROPERLY GROUNDED TO AVOID SEVERE OR FATAL SHOCK.

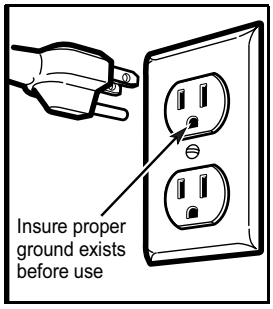

The power cord of this appliance is equipped with a three-prong (grounding) plug which mates with a standard three-prong (grounding) wall receptacle to minimize the possibility of electric shock hazard from this appliance.

You should have the wall receptacle and circuit checked by a qualified electrician to make sure the receptacle is properly grounded.

Where a standard two-prong wall receptacle is encountered, it is very important to have it replaced with a properly grounded three-prong wall receptacle, installed by a qualified electrician.

DO NOT, UNDER ANY CIRCUMSTANCES, CUT, DEFORM OR REMOVE ANY OF THE PRONGS FROM THE POWER CORD. DO NOT USE WITH AN EXTENSION CORD.

ELECTRICAL REQUIREMENTS

Product rating is 120 volts AC, 60 Hertz,

-MMV4205, AMV5206, MMV5207, JMV8208 (USA):

14.8 amps and 1.7 kilowatts.

-MMV5207,JMV8208 (CANADA) / AMV6167:

13 amps and 1.5 kilowatts.

-JMV8166/JMV9169:

14.5 amps and 1.6 kilowatts.

This product must be connected to a supply circuit of the proper voltage and frequency. Wire size must conform to the requirements of the National Electrical Code or the prevailing local code for this kilowatt rating. The power supply cord and plug should be brought to a separate 20 ampere branch circuit single grounded outlet. The outlet box should be located in the cabinet above the microwave oven. The outlet box and supply circuit should be installed by a qualified electrician and conform to the National Electrical Code or the prevailing local code.

 © 2006 Maytag Services

Installation Instructions

HOOD EXHAUST

NOTE: Read these next two pages only if you plan to vent your exhaust to the outside. If you plan to recirculate the air back into the room, proceed to page 11.

OUTSIDE TOP EXHAUST (EXAMPLE ONLY)

The following chart describes an example of one possible ductwork installation.

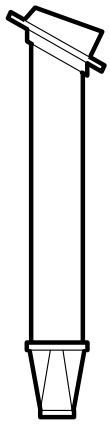

DUCT PIECES		EQUIVALENT LENGTH	x	NUMBER USED	=	EQUIVALENT LENGTH
	Roof Cap	24 Ft.	x	(1)	=	24 Ft.
	12 Ft. Straight Duct (6" Round)	12 Ft.	x	(1)	=	12 Ft.
	Rectangular-to-Round Transition Adaptor*	5 Ft.	x	(1)	=	5 Ft.
Equivalent lengths of duct pieces are based on actual tests and reflect requirements for good venting performance with any vent hood.				**Total Length**	=	**41 Ft.**

*** IMPORTANT:** If a rectangular-to-round transition adaptor is used, the bottom corners of the damper will have to be cut to fit, using the tin snips, in order to allow free movement of the damper.

OUTSIDE BACK EXHAUST (EXAMPLE ONLY)

The following chart describes an example of one possible ductwork installation.

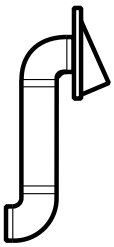

DUCT PIECES		EQUIVALENT LENGTH*	x	NUMBER USED	=	EQUIVALENT LENGTH
	Roof Cap	40 Ft.	x	(1)	=	40 Ft.
	3 Ft. Straight Duct (3¼" x 10" Rectangular)	3 Ft.	x	(1)	=	3 Ft.
	90° Elbow	10 Ft.	x	(2)	=	20 Ft.
Equivalent lengths of duct pieces are based on actual tests and reflect requirements for good venting performance with any vent hood.				**Total Length**	=	**63 Ft.**

NOTE: For back exhaust, care should be taken to align exhaust with space between studs, or wall should be prepared at the time it is constructed by leaving enough space between the wall studs to accommodate exhaust.

© 2006 Maytag Services

Installation Instructions

NOTE: If you need to install ducts, note that the total duct length of 3¼" x 10" rectangular or 6" diameter round duct should not exceed 60 equivalent feet.

Outside ventilation requires a HOOD EXHAUST DUCT. Read the following carefully.

NOTE: It is important that venting be installed using the most direct route and with as few elbows as possible. This ensures clear venting of exhaust and helps prevent blockages. **Also, make sure dampers swing freely and nothing is blocking the ducts.**

Exhaust connection:

The hood exhaust has been designed to mate with a standard 3¼" x 10" rectangular duct.

If a round duct is required, a rectangular-to-round transition adaptor must be used. **Do not use less than a 6" diameter duct.**

Maximum duct length:

For satisfactory air movement, the total duct length of 3¼" x 10" rectangular or 6" diameter round duct should not exceed 60 equivalent feet.

Elbows, transitions, wall and roof caps, etc., present additional resistance to airflow and are equivalent to a section of straight duct which is longer than their actual physical size. When calculating the total duct length, add the equivalent lengths of all transitions and adaptors plus the length of all straight duct sections. The chart below shows you how to calculate total equivalent ductwork length using the approximate feet of equivalent length of some typical ducts.

DUCT PIECES		EQUIVALENT LENGTH	x	NUMBER USED	=	EQUIVALENT LENGTH
	Rectangular-to-Round Transition Adaptor*	5 Ft.	x	( )	=	Ft.
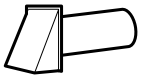	Wall Cap	40 Ft.	x	( )	=	Ft.
	90° Elbow	10 Ft.	x	( )	=	Ft.
	45° Elbow	5 Ft.	x	( )	=	Ft.
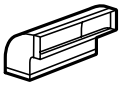	90° Elbow	25 Ft.	x	( )	=	Ft.
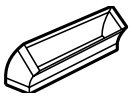	45° Elbow	5 Ft.	x	( )	=	Ft.
	Roof Cap	24 Ft.	x	( )	=	Ft.
	Straight Duct 6" Round or 3¼" x 10" Rectangular	1 Ft.	x	( )	=	Ft.
				Total Ductwork	**=**	**Ft.**

*** IMPORTANT:** If a rectangular-to-round transition adaptor is used, the bottom corners of the damper will have to be cut to fit, using the tin snips, in order to allow free movement of the damper.

Equivalent lengths of duct pieces are based on actual tests and reflect requirements for good venting performance with any vent hood.

 © 2006 Maytag Services

DAMAGE – SHIPMENT/ INSTALLATION

- **If the unit is damaged in shipment,** return the unit to the store in which it was bought for repair or replacement.
- **If the unit is damaged by the customer,** repair or replacement is the responsibility of the customer.
- **If the unit is damaged by the installer** (if other than the customer), repair or replacement must be made by arrangement between customer and installer.

PARTS INCLUDED

HARDWARE PACKET

PART		QUANTITY
	Wood Screws (¼" x 2")	1
	Toggle Bolts (and wing nuts) (3/16" x 3")	3
	Self-aligning Machine Screws (¼"-28 x 3¼")	3
	Nylon Grommet (for metal cabinets)	2

You will find the installation hardware contained in a packet with the unit. Check to make sure you have all these parts.

NOTE: Some extra parts are included.

ADDITIONAL PARTS

PART		QUANTITY
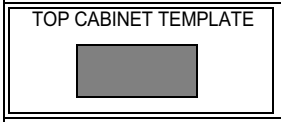	Top Cabinet Template	1
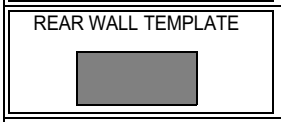	Rear Wall Template	1
	Installation Instructions	1
	Separately Packed Grease Filters	2
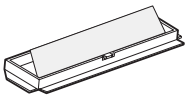	Exhaust adaptor	1

© 2006 Maytag Services

Installation Instructions

TOOLS YOU WILL NEED

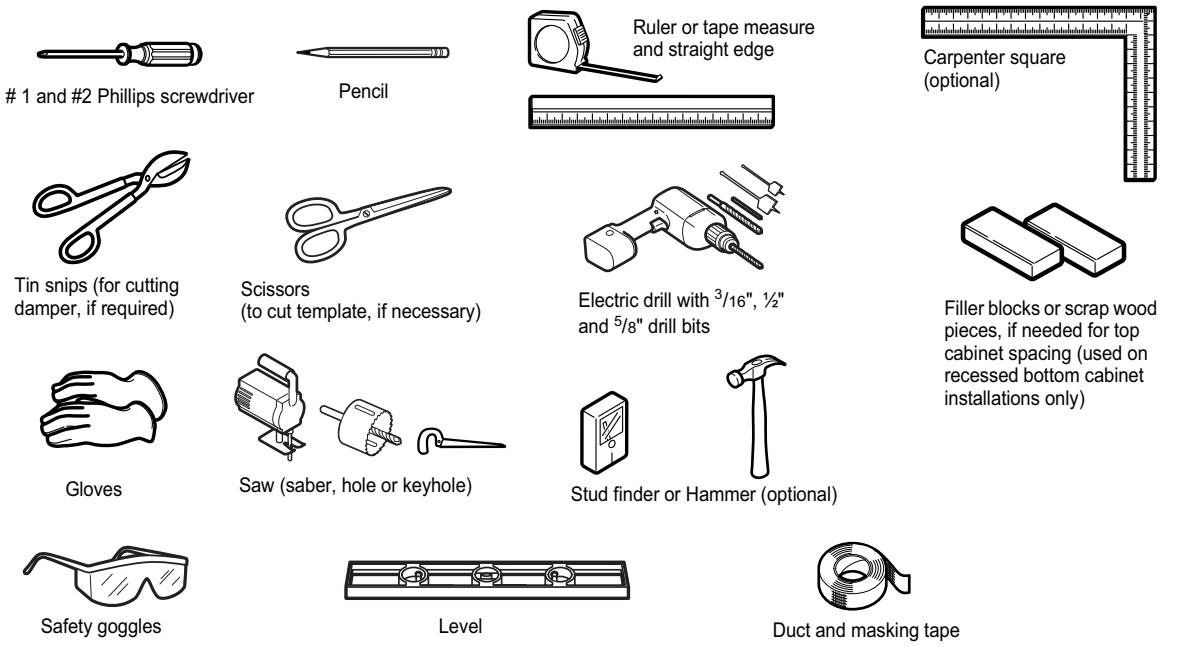

MOUNTING SPACE

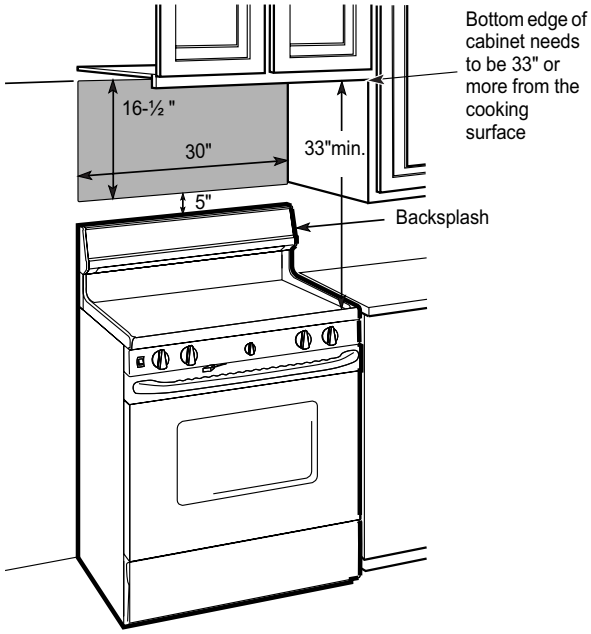

NOTES:

- The space between the cabinets must be 30" wide and free of obstructions.
- This microwave oven is for installation over ranges up to 33" wide.
- If you are going to vent your microwave oven to the outside, see Hood Exhaust Section for exhaust duct preparation.
- **When installing the microwave oven beneath smooth flat cabinets be careful to follow the instructions on the top cabinet template for power cord clearance.**

 © 2006 Maytag Services

Installation Instructions

1.PLACEMENT OF THE MOUNTING PLATE

A. REMOVING THE MICROWAVE OVEN FROM THE CARTON/ REMOVING THE MOUNTING PLATE

1. Remove the installation instructions, Exhaust adaptor, filters, glass tray and the small hardware bag. Do not remove the Styrofoam protecting the front of the oven.

2. Fold back all 4 carton flaps fully against carton sides. Then carefully roll the oven and carton over onto the top side. The oven should be resting in the Styrofoam.

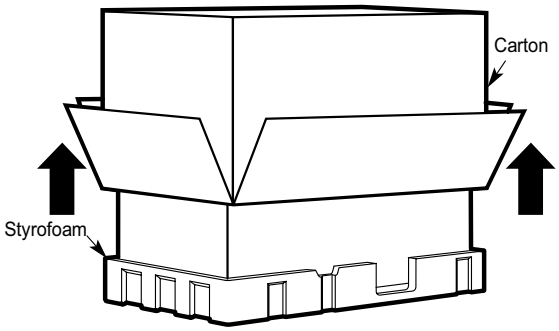

3. Pull the carton up and off the oven.

4. Remove and properly discard plastic bags.

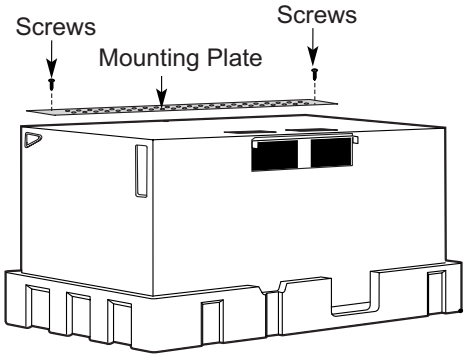

5. Remove the 2 screws from the mounting plate. This plate will be used as the rear wall template and for mounting.

NOTE: You will have to reuse two screws in original loction of outcase after removing mounting plate.

B. FINDING THE WALL STUDS

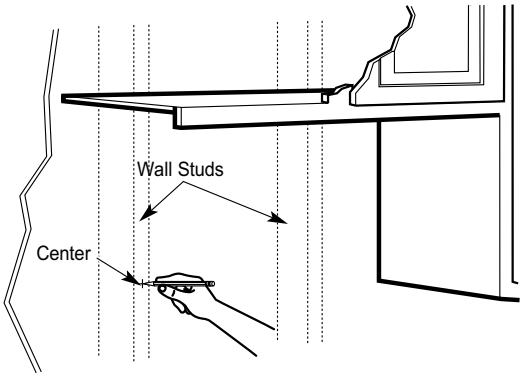

1. Find the studs, using one of the following methods:

A. Stud finder–a magnetic device which locates nails.

OR

B. Use a hammer to tap lightly across the mounting surface to find a solid sound. This will indicate a stud location.

2. After locating the stud(s), find the center by probing the wall with a small nail to find the edges of the stud. Then place a mark halfway between the edges. The center of any adjacent studs should be 16" or 24" from this mark.

3. Draw a line down the center of the studs.

THE MICROWAVE MUST BE CONNECTED TO AT LEAST ONE WALL STUD.

© 2006 Maytag Services

Installation Instructions

C. DETERMINING WALL PLATE LOCATION UNDER YOUR CABINET

Plate position – beneath flat bottom cabinet

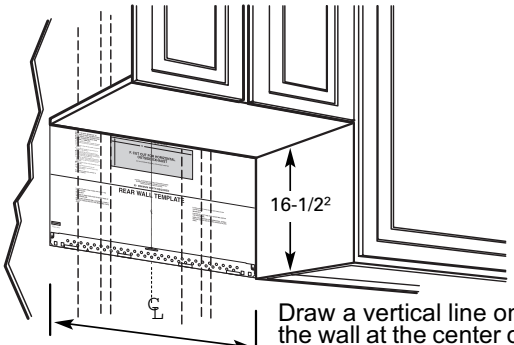

Draw a vertical line on the wall at the center of the 30″ wide space.

Tape the Rear Wall Template onto the wall matching the centerline and touching the bottom of the cabinet.

Plate position – beneath framed recessed cabinet bottom

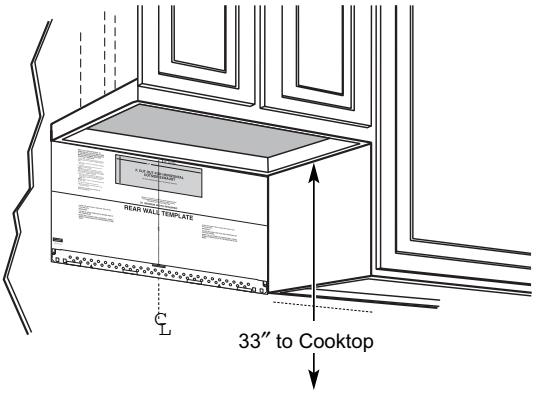

Draw a vertical line on the wall at the center of the 30″ space.

Tape the Rear Wall Template onto the wall matching the centerline and touching the bottom cabinet frame.

Plate position – beneath recessed bottom cabinet with front overhang

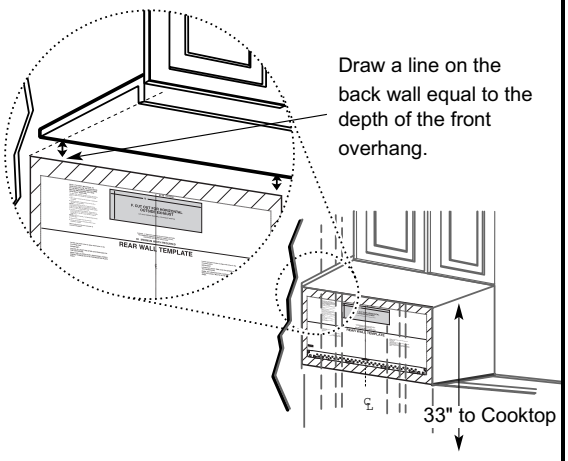

Your cabinets may have decorative trim that interferes with the microwave installation. Remove the decorative trim to install the microwave properly and to make it level.

THE MICROWAVE MUST BE LEVEL.

Use a level to make sure the cabinet bottom is level.

If the cabinets have a front overhang only, with no back or side frame, install the mounting plate down the same distance as the front overhang depth. This will keep the microwave level.

1. Measure the inside depth of the front overhang.
2. Draw a horizontal line on the back wall an equal distance below the cabinet bottom as the inside depth of the front overhang.
3. For this type of installation with front overhang only, align the mounting tabs with this horizontal line, not touching the cabinet bottom as described in Step D.

 © 2006 Maytag Services

Installation Instructions

D. ALIGNING THE WALL PLATE

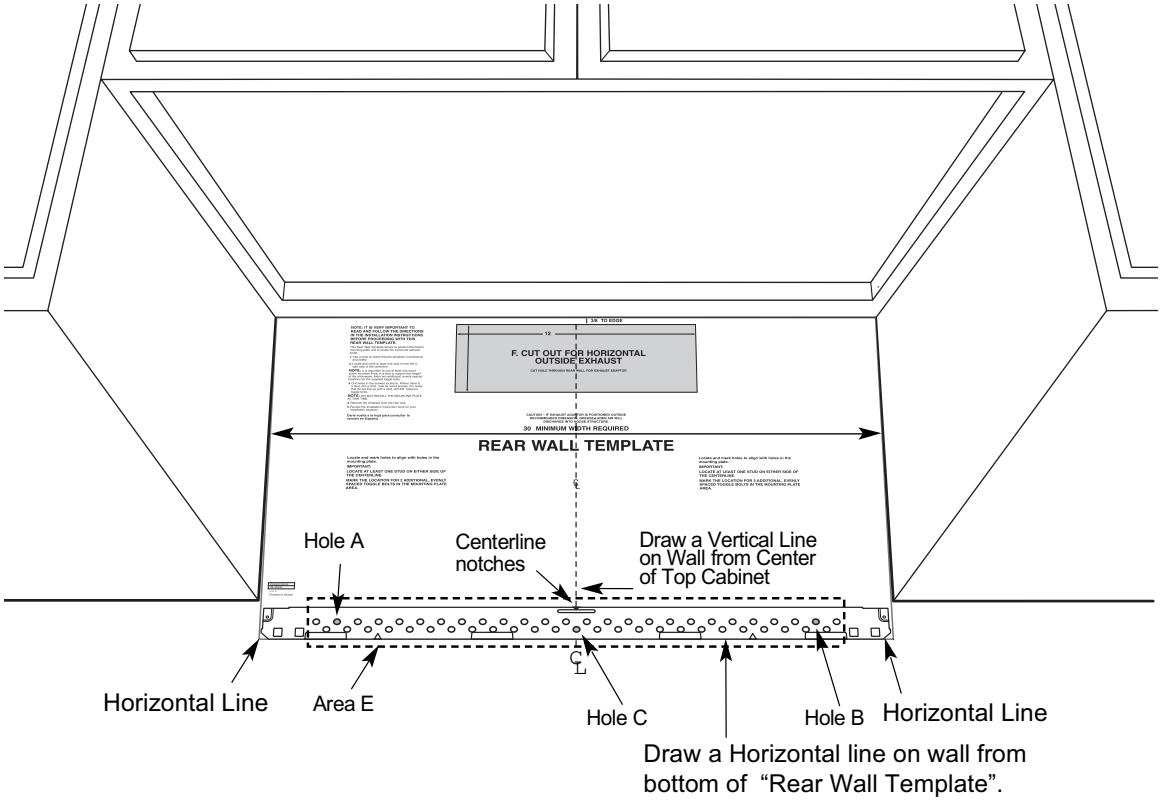

CAUTION: Wear gloves to avoid cutting fingers on sharp edges.

1. Draw a Vertical line on the wall at the center of the 30" wide space.
2. Draw a Horizontal line on the wall at the bottom of "Rear Wall Template".
3. Drill 5/8" holes for toggle bolts on 3 locations (Hole A, Hole B, Hole C) but if the location of hole is same as that of stud, drill a 3/16" hole for wood screw. In other words, toggle bolt can not be used to the location of stud.
   NOTE: DO NOT MOUNT THE PLATE AT THIS TIME.

NOTE: Holes A, B and C are inside area E. If none of A, B and C is in a stud, find a stud somewhere in area E and draw a forth circle to line up with the stud. It is important to use **at least one wood screw** mounted **firmly in a stud** to support the weight of the microwave. **Set the mounting plate aside**.

© 2006 Maytag Services

Installation Instructions

2. INSTALLATION TYPES (Choose A, B or C)

This microwave oven is designed for adaptation to the following three types of ventilation:

A. Recirculating (Non-Vented Ductless)
B. Outside Top Exhaust (Vertical Duct)
C. Outside Back Exhaust (Horizontal Duct)

NOTE: This microwave is shipped after being assembled for “Recirculating”. And exhaust adaptor is shipped assembled to the filler-upper. Select the type of ventilation required for your installation and proceed to that section.

A. RECIRCULATING (NON-VENTED DUCTLESS)

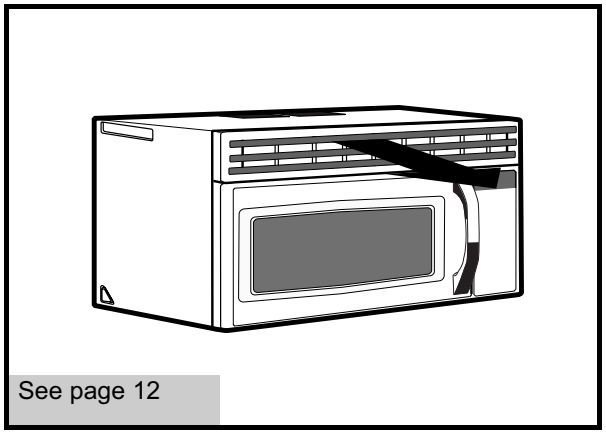

See page 12

B. OUTSIDE TOP EXHAUST (VERTICAL DUCT)

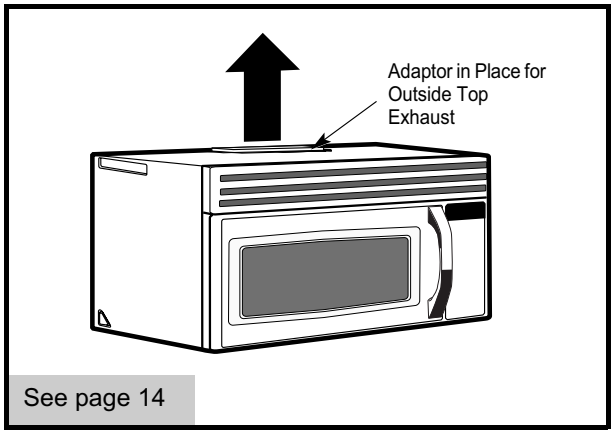

See page 14

C. OUTSIDE BACK EXHAUST (HORIZONTAL DUCT)

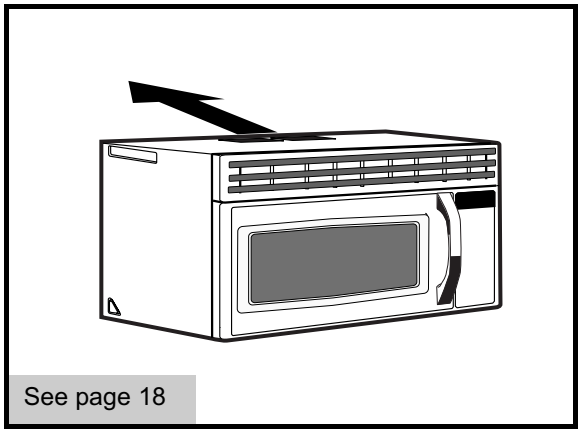

See page 18

 © 2006 Maytag Services

Installation Instructions

A. RECIRCULATING (Non-Vented Ductless)

INSTALLATION OVERVIEW

A1. Attach Mounting Plate to Wall

A2. Prepare Top Cabinet

A3. Mount the Microwave Oven

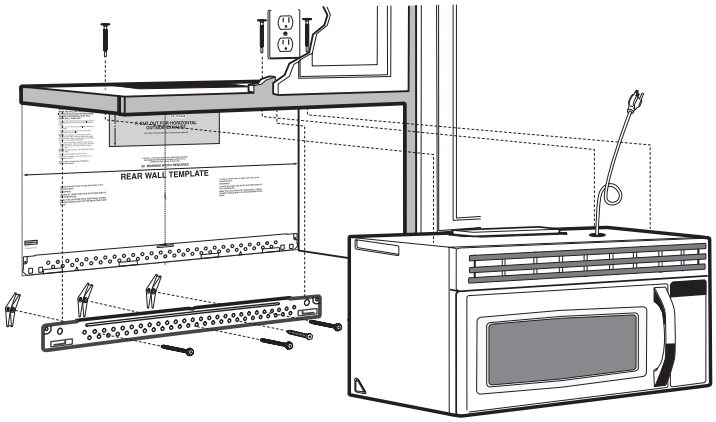

A1. ATTACH THE MOUNTING PLATE TO THE WALL

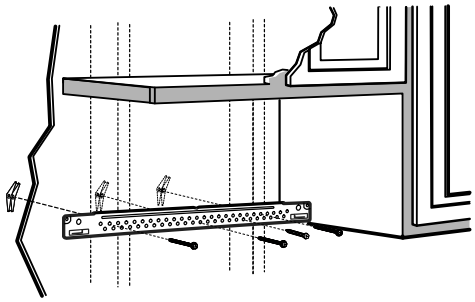

Attach the plate to the wall using toggle bolts. At least one wood screw must be used to attach the plate to a wall stud.

1. Remove the toggle wings from the bolts.
2. Insert the bolts into the mounting plate through the holes designated to go into drywall and reattach the toggle wings to ¾ " onto each bolt.

To use toggle bolts:

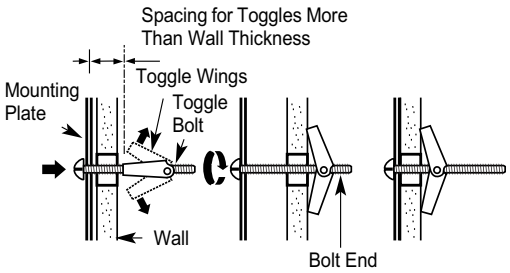

3. Place the mounting plate against the wall and insert the toggle wings into the holes in the wall to mount the plate.

NOTE: Before tightening toggle bolts and wood screw, make sure to coincide bottom line of the Mounting plate with Horizontal line of “Rear wall Template” and then the Mounting plate is properly centered under the cabinet.

CAUTION: Be careful to avoid pinching fingers between the back of the mounting plate and the wall.

4. Tighten all bolts. Pull the plate away from the wall to help tighten the bolts.

A2. USE TOP CABINET TEMPLATE FOR PREPARATION OF TOP CABINET

You need to drill holes for the top support screws and a hole large enough for the power cord to fit through.

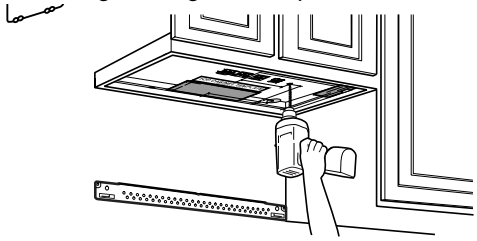

- Read the instructions on the TOP CABINET TEMPLATE.
- Tape it underneath the top cabinet.
- Drill the holes, following the instructions on the TOP CABINET TEMPLATE.

CAUTION: Wear safety goggles when drilling holes in the cabinet bottom.

© 2006 Maytag Services

Installation Instructions

A3. MOUNT THE MICROWAVE OVEN

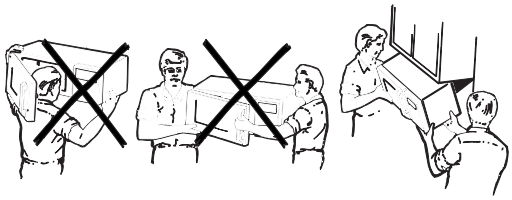

FOR EASIER INSTALLATION AND PERSONAL SAFETY, WE RECOMMEND THAT **TWO PEOPLE INSTALL THIS MICROWAVE OVEN.**

IMPORTANT: Do not grip or use handle during installation.

NOTE: If your cabinet is metal, use the nylon grommet around the power cord hole to prevent cutting of the cord.

NOTE: We recommend using filler blocks if the cabinet front hangs below the cabinet bottom shelf.

IMPORTANT: If filler blocks are not used, case damage may occur from over tightening screws.

NOTE: When mounting the microwave oven, thread power cord through hole in bottom of top cabinet. Keep it tight throughout Steps 1–3. Do not pinch cord or lift oven by pulling cord.

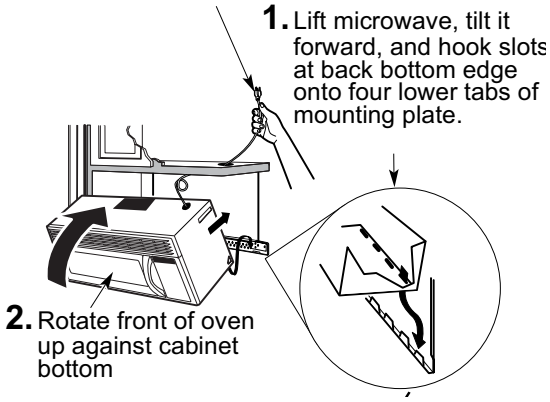

3. Insert a self-aligning screw through top center cabinet hole. Temporarily secure the oven by turning the screw at least **two full turns** after the threads have engaged. (It will be completely tightened later.) **Be sure to keep power cord tight. Be careful not to pinch the cord, especially when mounting flush to bottom of cabinet.**

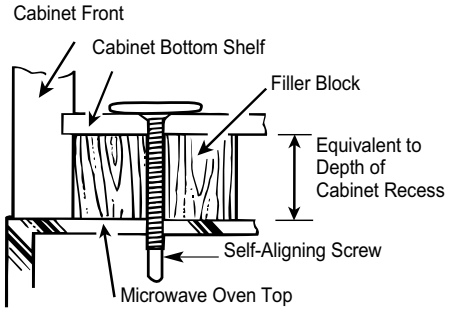

4. Attach the microwave oven to the top cabinet.

5. Insert 2 self-aligning screws through outer top cabinet holes. Turn two full turns on each screw.

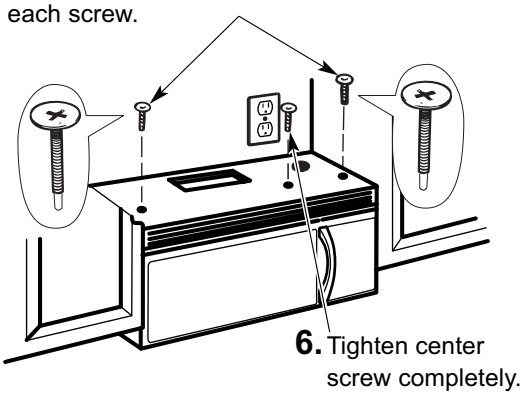

7. Tighten the outer two screws to the top of the microwave oven. (While tightening screws, hold the microwave oven in place against the wall and the top cabinet.)

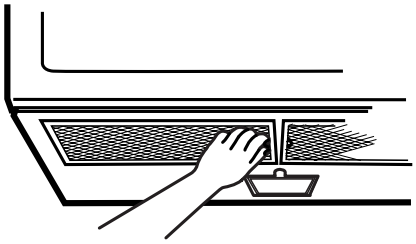

8. Install grease filters. See the Owner's Manual packed with the microwave.

 © 2006 Maytag Services

Installation Instructions

B. OUTSIDE TOP EXHAUST (Vertical Duct)

INSTALLATION OVERVIEW

B1. Attach Mounting Plate to Wall
B2. Prepare Top Cabinet
B3. Adjust Blower
B4. Check Damper Operation
B5. Mount Microwave Oven
B6. Adjust Exhaust Adaptor
B7. Connect Ductwork

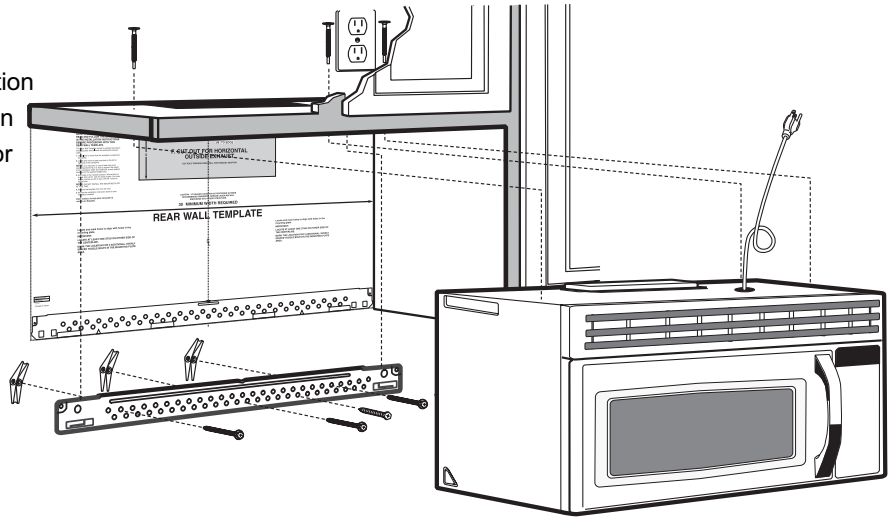

B1. ATTACH THE MOUNTING PLATE TO THE WALL

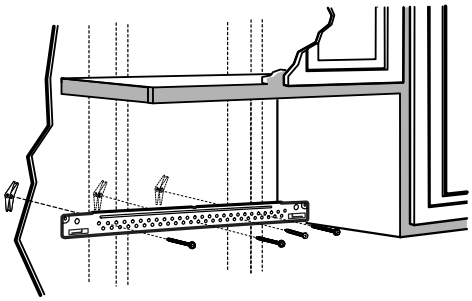

Attach the plate to the wall using toggle bolts. At least one wood screw must be used to attach the plate to a wall stud.

1. Remove the toggle wings from the bolts.
2. Insert the bolts into the mounting plate through the holes designated to go into drywall and reattach the toggle wings to ¾" onto each bolt.

To use toggle bolts:

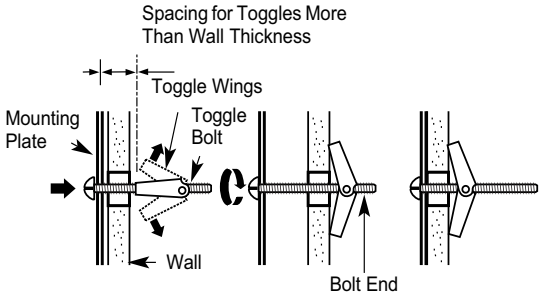

3. Place the mounting plate against the wall and insert the toggle wings into the holes in the wall to mount the plate.

NOTE: Before tightening toggle bolts and wood screw, make sure to coincide bottom line of the Mounting plate with Horizontal line of “Rear wall Template” and then the Mounting plate is properly centered under the cabinet.

CAUTION: Be careful to avoid pinching fingers between the back of the mounting plate and the wall.

4. Tighten all bolts. Pull the plate away from the wall to help tighten the bolts.

© 2006 Maytag Services

Installation Instructions

B2. USE TOP CABINET TEMPLATE FOR PREPARATION OF TOP CABINET

You need to drill holes for the top support screws, a hole large enough for the power cord to fit through, and a cutout large enough for the exhaust adaptor.

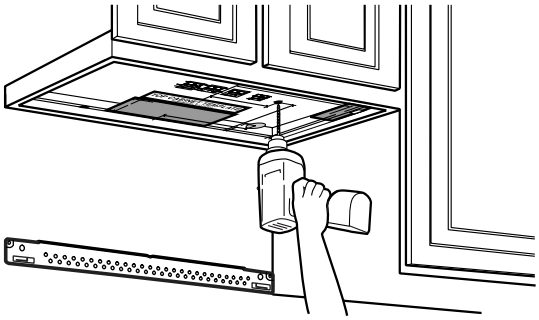

- Read the instructions on the TOP CABINET TEMPLATE.
- Tape it underneath the top cabinet.
- Drill the holes, following the instructions on the TOP CABINET TEMPLATE.

CAUTION: Wear safety goggles when drilling holes in the cabinet bottom.

B3. ADAPTING MICROWAVE BLOWER FOR OUTSIDE TOP EXHAUST

1. Remove and save screw that holds blower plate to microwave.

2. Lift up the blower plate.

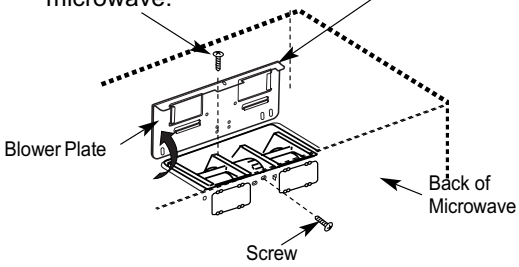

3. Carefully pull out the blower unit. The wires will extend far enough to allow you to adjust the blower unit.

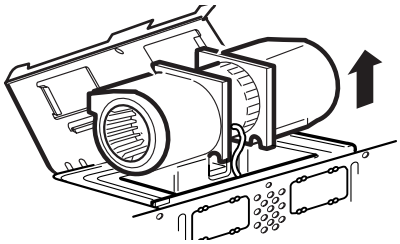

CAUTION: Do not touch blade of blower to prevent cracking and breaking. Hold outer case when the blower is removed and re-installed.

4. Roll the blower unit 90° so that fan blade openings are facing toward the top of the microwave.

BEFORE: Fan Blade Openings Facing Forward

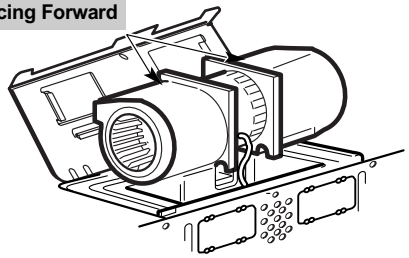

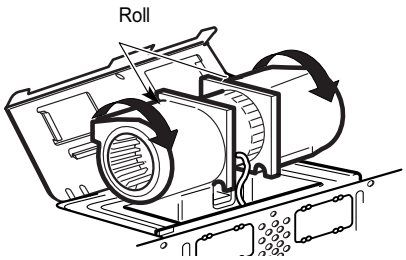

 © 2006 Maytag Services

Installation Instructions

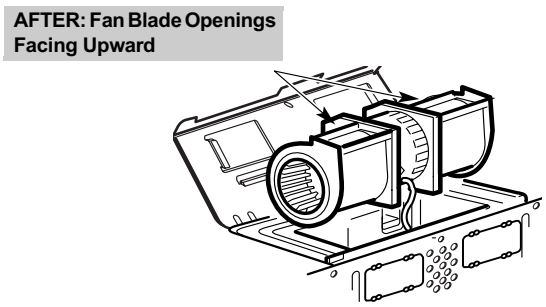

5. Place the blower unit back into the opening.

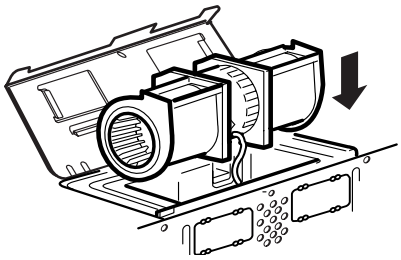

CAUTION: Do not pull or stretch the blower unit wiring. Make sure the wires are not pinched.

6. Secure blower unit to microwave with the screw.

B4. INSTALLATION PROCEDURE FOR EXHAUST ADAPTOR AND PROPER DAMPER OPERATION CHECK

1. Remove and save screw from the panel-outer

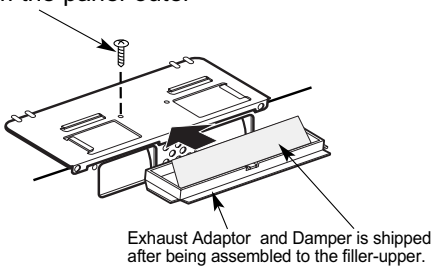

2. Slide exhaust adaptor following the instructions show in diagram.

3. Make sure tape securing damper is removed and damper pivots easily before mounting microwave

4. Lift damper and Re-screw at same location as (1)

- You will need to make adjustments to assure proper alignment with your house exhaust duct after the microwave is installed.

B5. MOUNT THE MICROWAVE OVEN

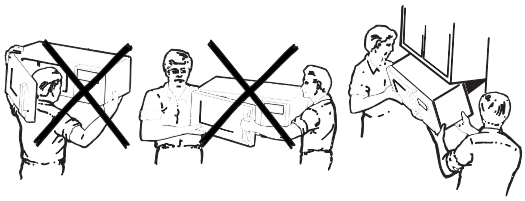

FOR EASIER INSTALLATION AND PERSONAL SAFETY, WE RECOMMEND THAT TWO PEOPLE INSTALL THIS MICROWAVE OVEN.

IMPORTANT: Do not grip or use handle during installation.

NOTE: If your cabinet is metal, use the nylon grommet around the power cord hole to prevent cutting of the cord.

NOTE: We recommend using filler blocks if the cabinet front hangs below the cabinet bottom shelf.

IMPORTANT: If filler blocks are not used, case damage may occur from over tightening screws.

NOTE: When mounting the microwave oven, thread power cord through hole in bottom of top cabinet. Keep it tight throughout Steps 1–3. Do not pinch cord or lift oven by pulling cord.

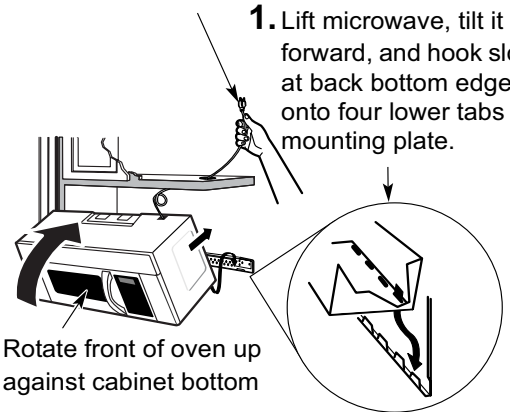

1. Lift microwave, tilt it forward, and hook slots at back bottom edge onto four lower tabs of mounting plate.

2. Rotate front of oven up against cabinet bottom

3. Insert a self-aligning screw through top center cabinet hole. Temporarily secure the oven by turning the screw at least **two full turns** after the threads have engaged. (It will be completely tightened later.) **Be sure to keep power cord tight. Be careful not to pinch the cord, especially when mounting flush to bottom of cabinet.**

© 2006 Maytag Services

Installation Instructions

B5. MOUNT THE MICROWAVE OVEN (cont.)

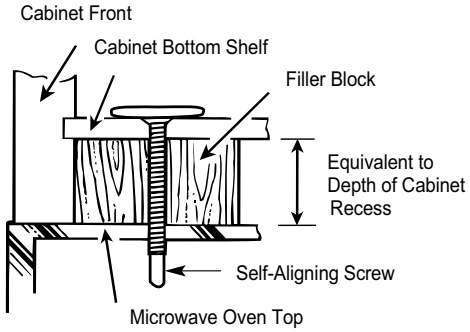

4. Attach the microwave oven to the top cabinet.

5. Insert 2 self-aligning screws through outer top cabinet holes. Turn two full turns on each screw.

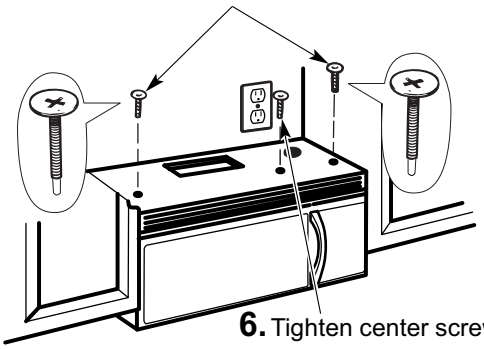

6. Tighten center screw completely.

7. Tighten the outer two screws to the top of the microwave oven. (While tightening screws, hold the microwave oven in place against the wall and the top cabinet.)

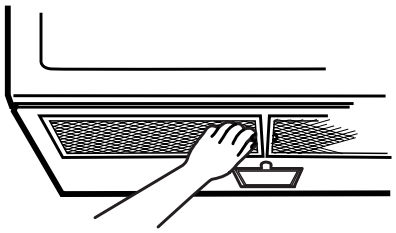

8. Install grease filters. See the Owner's Manual packed with the microwave.

B6. ADJUST THE EXHAUST ADAPTOR

Open the top cabinet and adjust the exhaust adaptor to connect to the house duct.

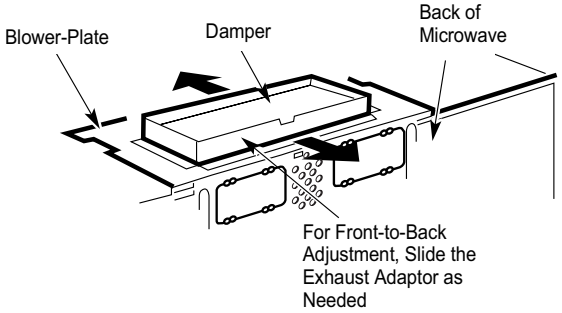

B7. CONNECTING DUCTWORK

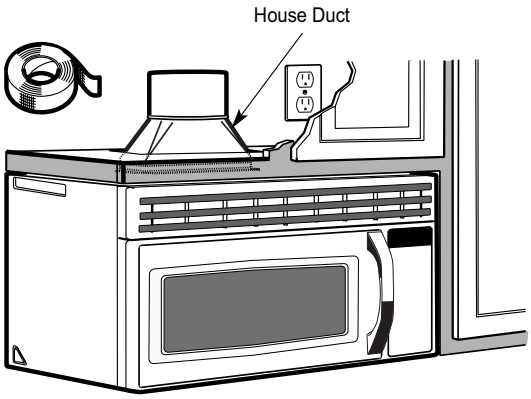

1. Extend the house duct down to connect to the exhaust adaptor.

2. Seal exhaust duct joints using duct tape.

 © 2006 Maytag Services

Installation Instructions

C. OUTSIDE BACK EXHAUST (Horizontal Duct)

INSTALLATION OVERVIEW

C1. Prepare Rear Wall
C2. Attach Mounting Plate to Wall
C3. Prepare Top Cabinet
C4. Adjust Blower
C5. Mount the Microwave Oven

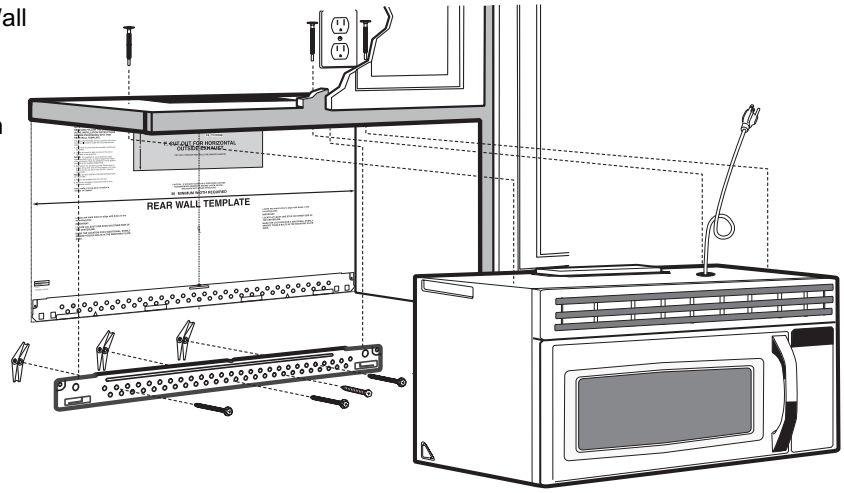

C1. PREPARING THE REAR WALL FOR OUTSIDE BACK EXHAUST

You need to cut an opening in the rear wall for outside exhaust.

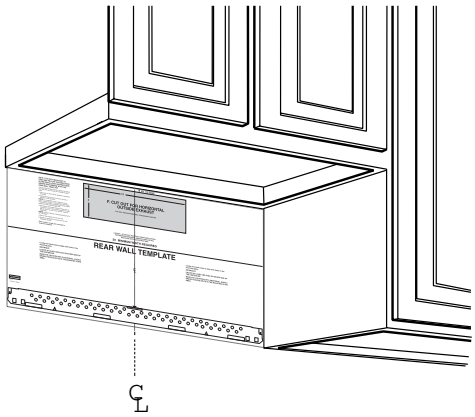

- Read the instructions on the REAR WALL TEMPLATE.
- Tape it to the rear wall.
- Cut the opening, following the instructions of the REAR WALL TEMPLATE.

C2. ATTACH THE MOUNTING PLATE TO THE WALL

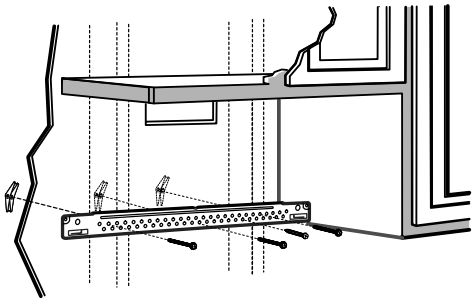

Attach the plate to the wall using toggle bolts. At least one wood screw must be used to attach the plate to a wall stud.

1. Remove the toggle wings from the bolts.
2. Insert the bolts into the mounting plate through the holes designated to go into drywall and reattach the toggle wings to ¾ " onto each bolt.

© 2006 Maytag Services

Installation Instructions

C2. ATTACH THE MOUNTING PLATE TO THE WALL (cont.)

To use toggle bolts:

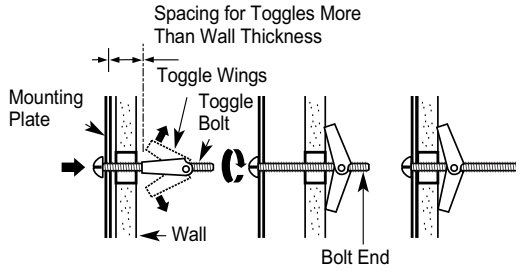

3. Place the mounting plate against the wall and insert the toggle wings into the holes in the wall to mount the plate.

NOTE: Before tightening toggle bolts and wood screw, make sure to coincide bottom line of the Mounting plate with Horizontal line of “Rear wall Template” and then the Mounting plate is properly centered under the cabinet.

CAUTION: Be careful to avoid pinching fingers between the back of the mounting plate and the wall.

4. Tighten all bolts. Pull the plate away from the wall to help tighten the bolts.

C3. USE TOP CABINET TEMPLATE FOR PREPARATION OF TOP CABINET

You need to drill holes for the top support screws and a hole large enough for the power cord to fit through.

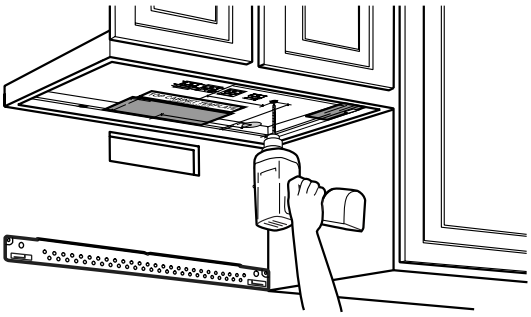

- Read the instructions on the TOP CABINET TEMPLATE.
- Tape it underneath the top cabinet.
- Drill the holes, following the instructions on the TOP CABINET TEMPLATE.

CAUTION: Wear safety goggles when drilling holes in the cabinet bottom.

C4. ADAPTING MICROWAVE BLOWER FOR OUTSIDE BACK EXHAUST

1. Remove and save screw that holds blower Plate to microwave.

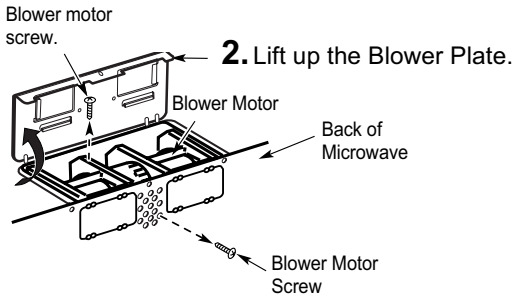

3. Carefully pull out the blower unit. The wires will extend far enough to allow you to adjust the blower unit.

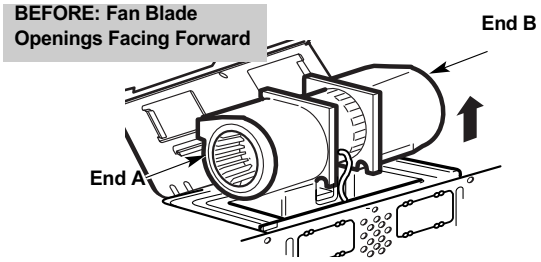

CAUTION: Do not touch blade of blower to prevent cracking and breaking. Hold outer case when the blower is removed and re-installed.

4. Remove “Parts “A” with Nipper or Scissors

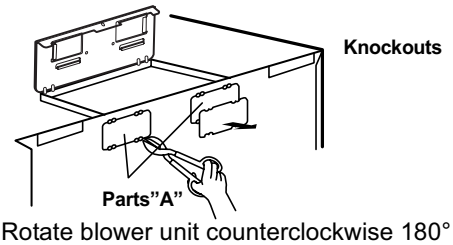

5. Rotate blower unit counterclockwise 180°.

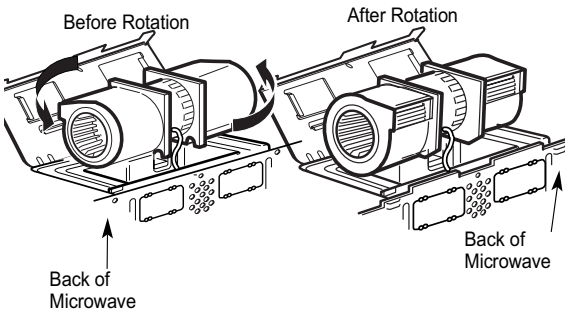

 © 2006 Maytag Services

Installation Instructions

6. Place the blower unit back into the opening.

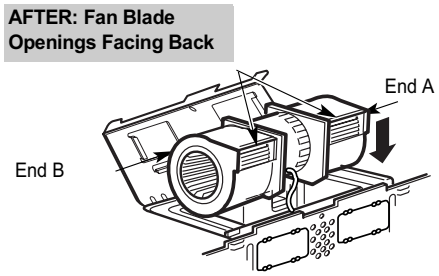

CAUTION: Do not pull or stretch the blower unit wiring. Make sure the wires are not pinched.
NOTE: The blower unit exhaust openings should match exhaust openings on rear of microwave oven.

7. Secure the blower unit to the microwave with the screw.

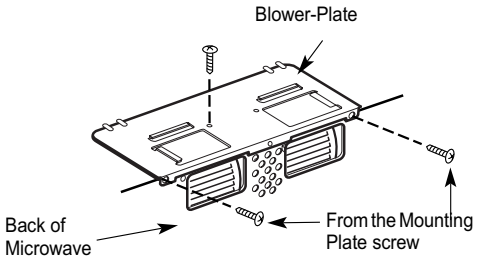

8. Attach the exhaust adaptor to the rear of the oven by sliding it into the guides at the top center of the back of the oven.

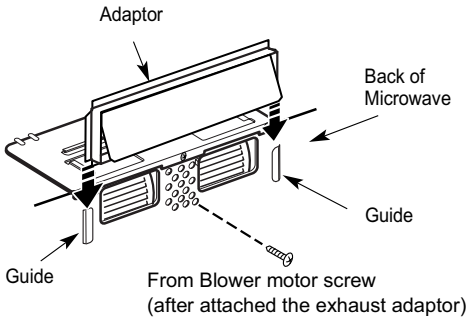

Push in securely until it is in the lower locking tabs. Take care to assure that the damper hinge is installed so that it is at the top and that the damper swings freely.

C5. MOUNT THE MICROWAVE OVEN

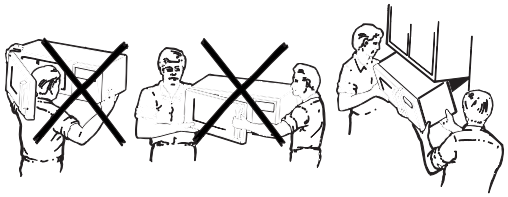

FOR EASIER INSTALLATION AND PERSONAL SAFETY, WE RECOMMEND THAT **TWO PEOPLE INSTALL THIS MICROWAVE OVEN**.

IMPORTANT: Do not grip or use handle during installation.

NOTE: If your cabinet is metal, use the nylon grommet around the power cord hole to prevent cutting of the cord.

NOTE: We recommend using filler blocks if the cabinet front hangs below the cabinet bottom shelf.

IMPORTANT: If filler blocks are not used, case damage may occur from over tightening screws.

NOTE: When mounting the microwave oven, thread power cord through hole in bottom of top cabinet. Keep it tight throughout Steps 1–3. Do not pinch cord or lift oven by pulling cord.

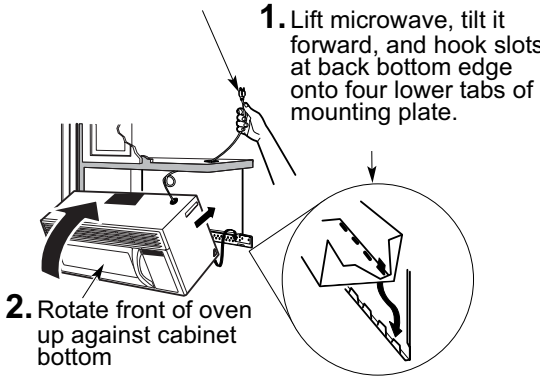

3. Insert a self-aligning screw through top center cabinet hole. Temporarily secure the oven by turning the screw at least **two full** turns after the threads have engaged. (It will be completely tightened later.) **Be sure to keep power cord tight. Be careful not to pinch the cord, especially when mounting flush to bottom of cabinet.**

© 2006 Maytag Services

Installation Instructions

C5. MOUNT THE MICROWAVE OVEN (cont.)

Install grease filters. See the Owner's Manual packed with the microwave.

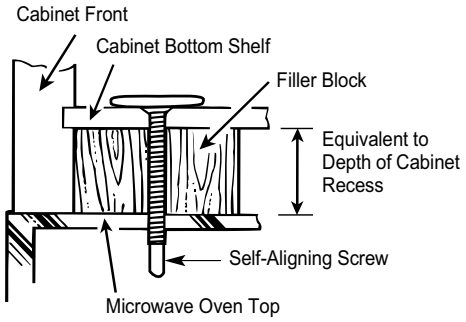

4. Attach the microwave oven to the top cabinet.

5. Insert 2 self-aligning screws through outer top cabinet holes. Turn two full turns on each screw.

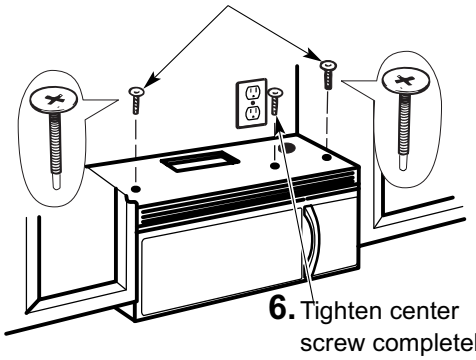

6. Tighten center screw completely.

7. Tighten the outer two screws to the top of the microwave oven. (While tightening screws, hold the microwave oven in place against the wall and the top cabinet.)

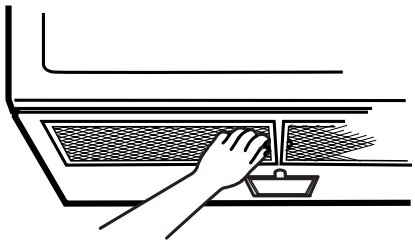

8. Install grease filters. See the Owner's Manual packed with the microwave.

 © 2006 Maytag Services

Appendix B

The Use and Care information provided in this service manual is representative of a limited number of models. Reference the customer's Use and Care literature included with the product, order a copy (if needed), or consult Jenn-Air's website for the specific model.

www.maytag.com or www.amana.com or www.jennair.com

Over The Range Microwave Oven

Use & Care Guide

Model JMV9169BA

Keep instructions for future reference.
Be sure Use & Care Guide stays with oven.

Form No. A/08/05

Part No.8112P302-60
Code No. DE68-03143J

 © 2006 Maytag Services

Features

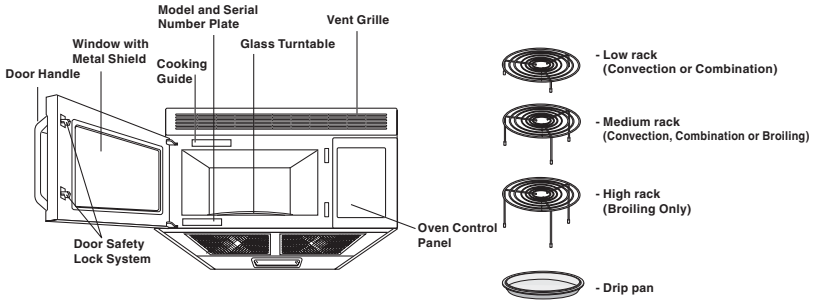

• See pages 22 and 27

OVEN SPECIFICATIONS

Power Supply	120 VAC, 60 Hz
Input Power	1,600W (USA)
Cooking Power	950 W (IEC 60705 Standard)
Frequency	2,450 MHz
Rated Current	14.5 A (USA)
Outer Dimensions	29 7/8"(W) x 16 15/16"(H) x 15 7/16"(D)
Cavity Volume	1.6 Cu. Ft.
Net Weight	71 lbs.

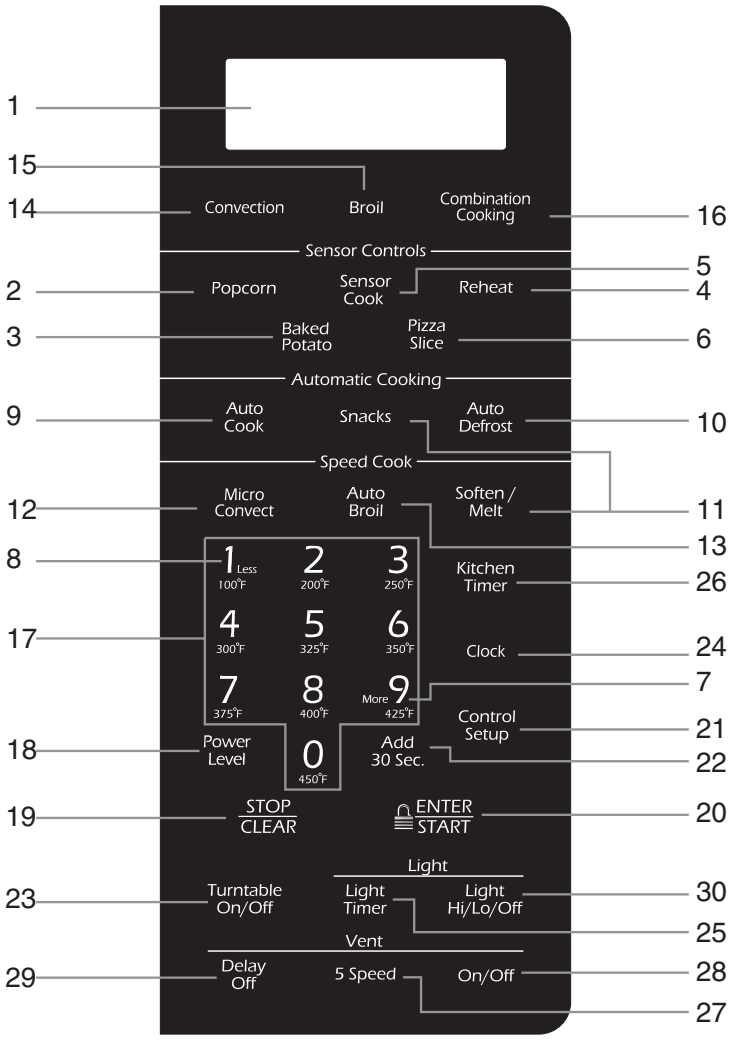

© 2006 Maytag Services

Operating Instructions

LEARN ABOUT YOUR MICROWAVE OVEN

This section introduces you to the basics you need to know to operate your microwave oven. Please read this information before use.

⚠ CAUTION

- To avoid risk of personal injury or property damage, do not run oven empty.
- To avoid risk of personal injury or property damage, do not use stoneware, aluminum foil, metal utensils, or metal trimmed utensils in the oven.

CLOCK

Example: To set 8:00 AM.

Clock — 1. Touch **CLOCK** pad.

8 0 0 (400°F 450°F 450°F) — 2. Enter the time by using the number pads.

ENTER START — 3. Touch **ENTER/START** pad.

1 Less (100°F) — 4. Touch **1** for AM.

ENTER START — 5. Touch **ENTER/START** pad.

NOTE:
- Follow steps 1-3 above in the 24 hour clock mode.

KITCHEN TIMER

You can use your microwave oven as a timer. Use the Kitchen Timer for timing up to 99 minutes, 99 seconds.

Example: To set for 8 minutes.

Kitchen Timer — 1. Touch **KITCHEN TIMER** pad.

8 0 0 (400°F 450°F 450°F) — 2. Enter the time by using the number pads.

ENTER START — 3. Touch **ENTER/START** pad.

When the time is over, you will hear beeps and **END** will display.

CONTROL SETUP

You can change the default values. See following chart for more information.

No.	Function	No.	Result
1	Weight mode selected	1 2	Lbs. Kg.
2	Sound ON/OFF control	1 2	Sound ON Sound OFF
3	Clock display control	1 2	12HR 24HR
4	Display	1 2 3	Slow speed Normal speed Fast speed
5	Remind end Signal	1 2	ON OFF
6	Demo Mode	1 2	ON OFF
7	Daylight Saving Time	1 2	ON OFF

Example: To change weight mode (from Lbs. to Kg).

Control Setup — 1. Touch **CONTROL SETUP** pad.

1 Less (100°F) — 2. Touch number **1** pad.

2 (200°F) — 3. Touch number **2** pad.

VENT FAN

The VENT moves steam and other vapors from the cooking surface. The vent will operate at the **LEVEL 2** whenever the oven is on.

Example: To set Level 4.

On/Off — 1. Touch **ON/OFF** pad. This shows the last level until you select the fan speed level.

5 Speed — 2. Touch **5 SPEED** pad until Level 4 appears in the display.

Touch **ON/OFF** pad to turn off fan when desired.

NOTE:
- If the temperature gets too hot around the microwave oven, the fan in the vent hood will automatically turn on at the **LEVEL2** setting to cool the oven. The fan will automatically turn off when the internal parts are cool. When this occurs, the vent cannot be turned off.

DELAY OFF

Example: To turn off fan after 30 minutes for Level 4.

On/Off — 1. Touch **ON/OFF** pad.

5 Speed — 2. Touch **5 SPEED** pad until Level 4 appears in the display.

Delay Off — 3. Touch **DELAY OFF** pad five times.

TURNTABLE ON/OFF

For best cooking results, leave the turntable on. It can be turned off for large dishes.

Turntable On/Off — Touch **TURNTABLE ON/OFF** pad to turn the turntable on or off.

NOTES:
- This option is not available in sensor cook, auto cook and defrost modes.
- **Sometimes the turntable can become hot to touch.** Be careful touching the turntable during and after cooking.
- **Do not run the oven empty.**

© 2006 Maytag Services

Operating Instructions

CHILD LOCK

You may lock the control panel to prevent the microwave from being accidentally started or used by children.

The Child Lock feature is also useful when cleaning the control panel. Child Lock prevents accidental programming when wiping the control panel.

Example: To set the child lock.

ENTER/START — Touch and hold **ENTER/START** pad more than 3 seconds. **CHILD LOCK ON** will appear in the display window with two beeps.

Example: To cancel the child lock.

ENTER/START — Touch and hold **ENTER/START** pad more than 3 seconds. **LOCKED** will disappear and you hear two beeps.

LIGHT HI/LO/OFF

Light Hi/Lo/Off — Touch **LIGHT HI/LO/OFF** pad once for bright light, twice for night light, or three times to turn the light off.

ADD 30 SEC.

A time-saving pad, this simplified control lets you quickly set and start microwave cooking without the need to touch the **ENTER/ START** pad.

Example: To set ADD 30 SEC. for 2 minutes.

Add 30 Sec. — Touch **ADD 30 SEC**. pad 4 times. The oven begins cooking and display shows time counting down.

LIGHT TIMER

You can set the LIGHT to turn on and off automatically at any time. The light comes on at the same time every day until reset.

Example: Turn on 2:00 AM, turn off 7:00 PM.

12 hour clock mode.

1. Light Timer — Touch **LIGHT TIMER** pad.
2. 2 0 0 (200°F 450°F 450°F) — Enter the time you want the LIGHT to turn on.
3. ENTER/START — Touch **ENTER/ START** pad .
4. 1 Less (100°F) — Touch **1** for AM.
5. ENTER/START — Touch **ENTER/ START** pad.
6. 7 0 0 (375°F 450°F 450°F) — Enter the time you want the LIGHT to turn off.
7. ENTER/START — Touch **ENTER/ START** pad.
8. 2 (200°F) — Touch **2** for PM.
9. ENTER/START — Touch **ENTER/ START** pad.

24 hour clock mode.

1. Light Timer — Touch **LIGHT TIMER** pad.
2. 2 0 0 (200°F 450°F 450°F) — Enter the time you want the LIGHT to turn on.
3. ENTER/START — Touch **ENTER/ START** pad .
4. 1 Less (100°F) More 9 0 0 (425°F 450°F 450°F) — Enter the time you want the LIGHT to turn off.
5. ENTER/START — Touch **ENTER/ START** pad.

Example: To cancel the LIGHT TIMER.

1. Light Timer — Touch **LIGHT TIMER** pad.
2. 0 (450°F) — Touch **0** pad.

MORE/LESS

The **More(9)/Less(1)** pads allow you to adjust pre-set cooking times. They only work in the Sensor Reheat, Sensor Cooking(except Beverage), Add 30 sec, Custom Cook or Time Cook modes. Use the **More(9)/ Less(1)** pads only after you have already begun cooking with one of these procedures.

1. More 9 (425°F) — To ADD more time to an automatic cooking procedure: Touch the **More(9)** pad.
2. 1 Less (100°F) — To REDUCE the time of an automatic cooking procedure: Touch the **Less(1)** pad.

Operating Instructions

COOKING AT HIGH POWER LEVELS

Example: To cook food for 8 minutes 30 seconds at 100% power.

8 3 0 — 1. Enter the cook time.

ENTER START — 2. Touch **ENTER/ START** pad.

When the cook time is over, you will hear four beeps and **END** will display.

COOKING AT LOWER POWER LEVELS

HIGH power cooking does not always give you the best results with foods that need slower cooking, such as roasts, baked goods, or custards. Your oven has 9 power settings in addition to HIGH.

Example: To cook food for 7 minutes 30 seconds at 70% power.

7 3 0 — 1. Enter the cook time.

Power Level — 2. Touch **POWER LEVEL** pad.

7 — 3. Enter the power level.

ENTER START — 4. Touch **ENTER/ START** pad.

When the cook time is over, you will hear four beeps and **END** will display.

See cooking guide for Power levels, page 12.

IMPORTANT:
- **DO NOT** store or use the wire rack in this oven unless more than one item is being cooked or a recipe calls for it.
- Damage to the oven could occur

COOKING WITH MORE THAN ONE COOK CYCLE

For best results, some recipes call for one Power Level for a certain length of time, and another Power Level for another length of time.Your oven can be set to change from one to another automatically, for up to three cycles if the first cycle is defrost.

Example: To cook food for 3 minutes at 90% power and then 70% power for 7 minutes 30 seconds.

3 0 0 — 1. Enter the first cook time.

Power Level — 2. Touch **POWER LEVEL** pad.

More 9 — 3. Enter the power level.

7 3 0 — 4. Enter the second cook time.

Power Level — 5. Touch **POWER LEVEL** pad.

7 — 6. Enter the power level.

ENTER START — 7. Touch **ENTER/ START** pad.

When the cook time is over, you will hear four beeps and **END** will display.

 © 2006 Maytag Services

Operating Instructions

SENSOR OPERATING INSTRUCTIONS

Sensor Cook allows you to cook most of your favorite foods without selecting cooking times and power levels. The display will indicate the sensing period by scrolling the name of the food. The oven automatically determines required cooking time for each food item. When the internal sensor detects a certain amount of humidity coming from the food, it will tell the oven how much longer to cook. The display will show the remaining heating time.

For best results when cooking by Sensor, follow these recommendations:

1. Food cooked with the sensor system should be at normal storage temperature.
2. Glass turntable and outside of container should be dry to assure best cooking results.
3. Most foods should always be covered loosely with microwavable plastic wrap, waxed paper, or a lid.
4. Do not open the door or touch the **STOP/CLEAR** pad during the sensing time. When sensing time is over, the oven beeps and the remaining cooking time will appear in the display window. At this time you can open the door to stir, turn, or rearrange the food.

IMPORTANT:
When using sensor cook, the oven must cool for 5 minutes between uses or food will not cook properly.

SENSOR COOKING GUIDE

Appropriate containers and coverings help assure good Sensor cooking results.

1. Always use microwavable containers and cover them with lids or vented plastic wrap.
2. **Never** use tight-sealing plastic covers. They can prevent steam from escaping and cause food to overcook.
3. Match the amount to the size of the container. Fill containers at least half full for best results.
4. Be sure the outside of the cooking container and the inside of the microwave oven are dry before placing food in the oven. Beads of moisture turning into steam can mislead the sensor.

ADDING OR SUBTRACTING COOK TIME

By using the **More(9)** or **Less(1)** pads all of the sensor cook and time cook settings can be adjusted to cook food for a longer or shorter time.

CAUTION
- **DO NOT** leave microwave unattended while popping corn.
- **DO NOT** use the wire rack when popping commercially packaged popcorn.

POPCORN

POPCORN pad lets you pop commercial-ly packaged microwave popcorn. Pop only one package at a time. For best results, use fresh bags of popcorn.

Example: To pop popcorn.

Popcorn — Touch **POPCORN** pad.

When the cook time is over, you will hear four beeps and **END** will display.

- Recommended amounts: 3.0-3.5 ozs.

PIZZA SLICE

Reheating pizza with PIZZA SLICE pad lets you reheat one or several slices of pizza without selecting cooking times and power levels.

Example: To reheat 2 slices of pizza.

Pizza Slice — Touch **PIZZA SLICE** pad.

When the cook time is over, you will hear four beeps and **END** will display.

- Recommended amounts: 1-4 slices.

NOTE:
If food is not thoroughly cooked or reheated when using the sensor feature, complete using a power level and cooking time. **DO NOT** continue using the sensor pad.

Operating Instructions

BAKED POTATO

The **BAKED POTATO** pad lets you bake one to six potatoes without selecting cooking times and power levels.

NOTES:
- Cooking time is based on a 8-10 oz. potato.
- Use the **More(9)/Less(1)** pads if cooking larger or smaller potatoes.
- Before baking, pierce potato with fork several times.
- If potato is not completely cooked, use Cooking Time. **DO NOT** use **BAKED POTATO** pad to complete cooking.

After baking, let stand for 5 minutes.

Example: To cook 2 potatoes.

Baked Potato — Touch **BAKED POTATO** pad.

When the cook time is over, you will hear four beeps and **END** will display.

Recommended amounts: 1-6 potatoes.

SENSOR COOK

Using **SENSOR COOK** pad lets you heat common microwave-prepared foods without needing to program cooking times and power levels. SENSOR COOK has 5 preset food categories: **Frozen Vegetable, Frozen Breakfast, Frozen Dinner, Fresh Vegetable, shrimp.**

Example: To cook Frozen Dinner.

Cook — 1. Touch **SENSOR COOK** pad.

3 250°F — 2. Choose food category. (1-5)

Category	Touch Pad Number
Frozen Vegetable	1
Frozen Breakfast	2
Frozen Dinner	3
Fresh Vegetable	4
Shrimp	5

When the cook time is over, you will hear four beeps and **END** will display.

Recommended amounts:

Frozen Vegetable	1-4 Servings
Frozen Breakfast	4-8 ozs.
Frozen Dinner	8-14 ozs.
Fresh Vegetable	1-4 Servings
Shrimp	8-32 ozs.

REHEAT

REHEAT pad lets you heat foods without needing to program cooking times and power levels. REHEAT has 3 preset categories: **Dinner Plate, Casserole, and Pasta.**

Example: To reheat Casserole.

Reheat — 1. Touch **REHEAT** pad.

2 200°F — 2. Choose food category (1-3).

Category	Touch Pad Number
Dinner Plate	1
Casserole	2
Pasta	3

When the cook time is over, you will hear four beeps and **END** will display.

Recommended amounts:

Dinner Plate	1 serving
Casserole	1-4 servings
Pasta	1-4 sevings

© 2006 Maytag Services

Operating Instructions

SENSOR COOK TABLE

CATEGORY		DIRECTIONS	AMOUNT
Popcorn		Use only one microwave-only bag of popcorn at a time. Use caution when removing and opening the hot bag from oven. Let oven cool for at least 5 minutes before using again.	3.0 to 3.5 oz 1 package
Baked Potato		Prick each potato several times with fork. Place on turntable in spoke-like fashion. Let stand 3-5 minutes. Let oven cool for at least 5 minutes before using again. Use **More(9)** pad when cooking larger potatoes.	1 to 6 potatoes
Pizza Slice		Put 1-3 slices of pizza on a Microwave-safe plate with wide end of slice toward the outside edge of the plate. Do not let slices overlap. Do not cover. Let oven cool for at least 5 minutes before using again. Use **More(9)** pad to increase reheat time for thick crust pizza.	1 to 4 Slices
COOK	Frozen Vegetables	Place frozen vegetables in microwave-safe ceramic, glass or plastic dish and add 2-4 Tbs. water. Cover with lid or vented plastic wrap during cooking and stir before standing. Let oven cool for at least 5 minutes before using again. Use the **More(9)** pad when cooking dense vegetables such as carrots or broccoli spears.	1 to 4 servings
COOK	Frozen Breakfast	Follow package instructions for covering and standing. Use this pad for frozen sandwich, breakfast entree, etc. Let oven cool for at least 5 minutes before using again.	4 to 8 oz.
COOK	Frozen Dinner	Remove food from outer wrapping and follow box instructions for covering and standing. Let oven cool for at least 5 minutes before using again.	8 to 14 oz.
COOK	Fresh Vegetables	Place fresh vegetables in microwave-safe ceramic, glass or plastic dish and add 2-4 Tbs. water. Cover with lid or vented plastic wrap during cooking and stir before standing. Let oven cool for at least 5 minutes before using again. Use the **More(9)** pad when cooking dense vegetables such as carrots or broccoli spears.	1 to 4 servings
COOK	Shrimp	Arrange shrimp in a microwave-safe ceramic glass or plastic dish and add 2-4 Tbs melted butter. Cover with lid or vented plastic wrap during cooking and stir before serving. Let stand 3 minutes. Let oven cool at least 5 minutes before using again.	8 to 32 oz.

SENSOR REHEAT TABLE

CATEGORY	DIRECTIONS	AMOUNT
Dinner Plate	Use only pre-cooked, refrigerated foods. Cover plate with vented plastic wrap or waxed paper, tucked under plate. If food is not as hot as you prefer after heating with SENSOR REHEAT, continue heating using cooking time and power level. Do not continue cooking using the **Reheat** pad. Contents: - 3-4 oz. meat, poultry or fish (up to 6 oz. with bone) - 1/2 cup starch (potatoes, pasta, rice, etc.) - 1/2 cup vegetables (about 3-4 oz.)	1 serving (1 plate)
Casserole	Cover plate with lid or vented plastic wrap. If food is not as hot as you prefer after heating with SENSOR REHEAT, continue heating using time and power level. Do not continue cooking using the **Reheat** pad. Stir foods once before serving. Contents: - Casserole-refrigerated foods. (Examples: Lasagna and beef stew.) - Pasta-Canned spaghetti and ravioli, refrigerated foods.	1 to 4 servings
Pasta		

NOTE:
Desired food temperature varies from person to person.Use the **More(9)/Less(1)** pads to fit your temperature preference.

Operating Instructions

AUTO COOK

AUTO COOK pad provides five preset categories for cooking.

Example: To Cook 2 ozs. of baby food.

Auto Cook

1. Touch **AUTO COOK** pad once.
2. Choose food category (1-5).

ENTER START

3. Touch **ENTER/START** pad.

Category	Touch pad number
Baby Food	1
Beverage	2
Frozen Sandwich	3
Bacon	4
Instant Rice	5

When the cook time is over, you will hear four beeps and **End** will display.

AUTO COOK TABLE

CATEGORY	DIRECTIONS	AMOUNT
Baby Food	Remove lid from baby food and place in the center of oven. Check temperature and stir well before serving. The **More(9)/Less(1)** pads cannot be used with the baby food. Follow manufacturer's instructions, some baby food should not be heated in the microwave oven.	2.5, 4, 6 ozs.
Beverage	Use measuring cup or mug; do not cover. Place the beverage in the oven. After heating, stir well. Let oven cool for at least 5 minutes before using again. Note: • Reheat times based on an 8 ounce cup. • Beverage heated with the beverage feature may be very hot. • Remove container with care.	0.5 cup 1 cup 2 cups
Frozen Sandwich	Place frozen sandwich in susceptor "sleeve" (which is in package) and put on plate.	1, 2 EA
Bacon	Place 2 paper towels on plate and arrange bacon on towels, do not overlap. Cover with additonal paper towel. Remove paper towel immediately after cooking. Use **More(9)/Less(1)** pads for desired crispness.	2, 4, 6 slices
Instant Rice	Follow microwave package preparation instructions. Use a large microwave-safe cookware to prevent boilover.	2, 4 servings

NOTE:
Desired food temperature varies from person to person.Use the **More(9)/Less(1)** pads to fit your temperature preference.

 © 2006 Maytag Services

Operating Instructions

AUTO DEFROST

Defrost choices are preset in the oven. The defrost feature provides you with the best defrosting method for frozen foods, because the oven automatically sets the defrosting times according to the weight you enter. For added convenience, the AUTO DEFROST beeps to remind you to check or turn over the food during the defrost cycle.

After touching the AUTO DEFROST pad once, select the food weight. Available weight ranges are 0.1 to 6.0 lbs.

Example: To defrost 1.8 lbs of meat.

Auto Defrost — 1. Touch **AUTO DEFROST** pad.

1 Less 8 (100°F 400°F) — 2. Enter the weight.

ENTER START — 3. Touch **ENTER/START** pad.

NOTES:
- After you touch **ENTER/START** pad, the display counts down the defrost time. The oven will beep twice during the Defrost cycle. At this time, open the door and turn the food as needed. Remove any portions that have thawed then return frozen portions to the oven and touch **ENTER/START** pad to resume the defrost cycle.
- **The oven will not stop during the BEEP unless the door is opened.**

DEFROSTING GUIDE

- Follow the instructions below when defrosting different types of food.

Touch pad No.	Food	Standard Amount	Procedure
1	**MEAT**	2.5-6.0 lbs.	Start with the food placed fat side down. After each stage, turn the food over and shield any warm portions with narrow strips of aluminum foil. Let stand, covered, for 15 to 30 minutes.
2	**POULTRY**	0.5-3.0 lbs.	After each stage, rearrange the food. If there are any warm or thawed portions of food, shield them with narrow flat pieces of aluminum foil. Remove any pieces of food that are nearly defrosted. Let stand, covered, for 5-10 minutes.
3	**FISH**	0.5-3.0 lbs.	After each stage, rearrange the food. If there are any warm or thawed portions of food, shield them with narrow flat pieces of aluminum foil. Remove any pieces of food that are nearly defrosted. Let stand, covered, for 5-10 minutes.
4	**BREAD**	0.1-2.0 lbs.	Arrange rolls in a circle horizontally on paper towels in the middle of turntable. Turn over after half of the defrosting time.
5	**GROUND BEEF**	1.0 lb.	After each stage, remove any pieces of food that are nearly defrosted. Let stand, coverd with foil for 5-10 minutes.

DEFROST TIPS

- When using AUTO DEFROST, the weight to be entered is the net weight in pounds and tenths of pounds (the weight of the food minus the container).
- Use AUTO DEFROST only for raw food. AUTO DEFROST gives best results when food to be thawed is a minimum of 0°F (taken directly from a true freezer). If food has been stored in a refrigerator-freezer that does not maintain a temperature of 5°F or below, always program a lower food weight (for a shorter defrosting time) to prevent cooking the food.
- If the food is stored outside the freezer for up to 20 minutes, enter a lower food weight.
- The shape of the package alters the defrosting time. Shallow rectangular packets defrost more quickly than a deep block.
- Separate pieces as they begin to defrost. Separated pieces defrost more easily.
- Shield areas of food with small pieces of foil if they start to become warm.
- You can use small pieces of aluminum foil to shield foods like chicken wings, leg tips, and fish tails, but the foil must not touch the side of the oven. Foil causes arcing, which can damage the oven lining.

Operating Instructions

SNACKS

SNACKS lets you heat 4 categories of food: **Nachos, Chicken Wings, Potato Skins, and Cheese Sticks.**

Example: To cook chicken wings.

Snacks 1. Touch **SNACKS** pad.

2 200°F 2. Choose food category(1-4).

ENTER START 3. Touch **ENTER/START** pad.

Category	Touch Pad Number
Nachos	1
Chicken Wings	2
Potato Skins	3
Cheese Sticks	4

SNACKS CHART

Item	Amount or servings	Remarks
Nachos	1 serving	• Place tortilla chips on plate without overlapping. • Sprinkle evenly with cheese. • Contents: - 2 cups tortilla chips - 1/3 cup grated cheese
Chicken Wings	5-6 oz. 7-8 oz.	• Use pre-cooked, refrigerated chicken wings. • Place chicken wings around plate in spoke fashion and cover with wax paper.
Potato Skins	1 cooked potato 2 cooked potatoes	• Cut cooked potato into 4 even wedges. Scoop or cut out potato flesh, leaving about 1/4” of skin. • Place skins in spoke fashion around plate. • Sprinkle with bacon, onions and cheese. Do not cover.
Cheese Sticks	5-7 pcs 8-10 pcs	• Place cheese sticks on plate in spoke fashion. • Do not cover.

 © 2006 Maytag Services

Operating Instructions

SOFTEN/MELT

SOFTEN/MELT lets you soften or melt 3 categories of food: **Melt Chocolate, Soften Cream Cheese and Melt Butter.**

Example: To melt chocolate.

1. Touch **SOFTEN/MELT** pad.
2. Choose food category(1-3).
3. Touch **ENTER/START** pad.

Category	Touch Pad Number
Melt Chocolate	1
Soften Cream Cheese	2
Melt Butter	3

SOFTEN/MELT CHART

Item	Amount or servings	Remarks
Melt Chocolate	2 squares or 1 cup chips	• Place chocolate chips or square in a microwave-safe dish. • Stir well at half time when the oven beeps, and re-start the oven. • Unless stirred, the chocolate keeps its shape even when heating time is over.
Soften Cream Cheese	1 package (8 oz.)	• Unwrap cream cheese and place on microwave-safe dish. • Let stand 1-2 minutes.
Melt Butter	1 stick (1/4 lb.) 2 sticks (1/2 lb.)	• Remove wrapping and cut butter in half vertically. • Place butter in dish, cover with wax paper. • Stir well after finishing and let stand 1-2 minutes.

© 2006 Maytag Services

Operating Instructions

MICRO/CONVECT

This oven can cook food without entering cooking time or power level using MICRO/CONVECT.
MICRO/CONVECT has 4 food categories: **Whole Chicken, Roast Pork, Frozen Lasagna, Baked Potatoes.**

Example: To cook 2 lbs. roast pork.

STOP/CLEAR — 1. Touch **STOP/CLEAR** pad.

Micro Convect — 2. Touch **MICRO/CONVECT** pad.

2 (200°F) — 3. Choose food category.

2 0 (200°F 450°F) — 4. Touch number pads for food quantity.

ENTER/START — 5. Touch **ENTER/START** pad.

MICRO/CONVECT TABLE

CATEGORY	TOUCH PAD	WEIGHT	RACK SIZE	COMMENTS
Whole Chicken	1	2.0-4.0 lbs.	Low rack on enamel metal tray on glass turntable.	Fold chicken wings under the chicken. Brush with melted butter. Place chicken, breast side down on low rack on metal tray on turntable. When oven beeps, turn chicken over and restart oven. Let stand 5 minutes.
Roast Pork, Boneless Tenderloin	2	2.0-4.0 lbs.	Low rack on enamel metal tray on glass turntable.	Place pork on low rack. Place wire rack on metal tray on turntable. When oven beeps, turn roast over and restart oven. Let stand 5 minutes.
Frozen Lasagna	3	10 oz. or 21 oz.	Low rack on glass turntable.	Place lasagna on low rack. Place wire rack on glass turntable. Let stand 3 to 5 minutes.
Baked Potatoes	4	1-4 potatoes	Medium wire rack on glass turntable.	Place potatoes on medium wire rack. Place wire rack on glass turntable. When oven beeps, turn potatoes over and restart oven. Let stand 5 minutes.

NOTE:
When checking food for doneness during cooking, carefully remove food, rack and drip tray (if used) from the oven and close oven door to prevent excessive heat loss.

 © 2006 Maytag Services

Operating Instructions

AUTO BROIL COOKING

(Hamburger, Beef Steak, Chicken Pieces, Fish Steak)

Auto Broil lets you cook with broil heat, without setting a cooking time. Choose the category of the food you are cooking and enter the quantity.

See the **AUTO BROIL CHART** on this page for the settings available.

STOP/CLEAR 1. Touch **STOP/CLEAR** pad.

Auto Broil 2. Touch **AUTO BROIL** pad.

1 Lo 100°F 3. Choose food category (1-4).

1 Less 100°F 4. Touch number pad for food quantity.

ENTER/START 5. Touch **ENTER/START** pad.

NOTE:
- Place food on ceramic enamel drip pan.
- Place drip pan on high rack.
- Place rack on turntable.

CATEGORY	TOUCH PAD NO.	AMOUNT	COMMENT
Hamburger	1	1-6 patties	Place hamburgers on ceramic enamel drip pan then place pan on high rack and in oven. When oven beeps, turn the food over and re- start the oven.
Beef Steak	2	1-2 pcs.	Place beef steak on ceramic enamel drip pan then place pan on high rack and in oven. When oven beeps, turn the food over and re- start the oven.
Chicken Breast	3	0.4-2.0 lbs.	Place chicken breast on ceramic enamel drip pan then place pan on high rack and in oven. When oven beeps, turn the food over and re-start the oven.
Fish Steak	4	1-2 pcs.	Place fish steak on ceramic enamel drip pan then place pan on high rack and in oven. When oven beeps, turn the food over and re- start the oven.

NOTE:
When checking food for doneness during cooking, carefully remove food, rack and drip tray (if used) from the oven and close oven door to prevent excessive heat loss.

© 2006 Maytag Services

Operating Instructions

CONVECTION COOKING

During convection cooking, a heating element is used to raise the temperature of the air inside the oven. Convection cooking temperature ranges from 100°F to 450°F. It is best to preheat the oven when convection cooking.

Lower oven temperature by 25°F from package recommended temperature instructions if lighter browning is preferred. The baking time may vary according to the food condition or individual preference. Check doneness at the minimum time and then adjust time by touching the More(9) or Less(1) pad.

⚠ CAUTION

- To avoid risk of burns, handle utensils, racks, and door with care. Allow oven, utensils, and racks to cool before cleaning. Oven, utensils, and racks, become hot during operation.
- To avoid risk of personal injury or property damage, do not use oven without turntable in place.
- To avoid risk of personal injury or property damage, do not cover turntable or rack with aluminum foil.
- To avoid risk of property damage, do not use lightweight plastic containers, plastic wraps or paper products during a convection cooking cycle.
- **Do Not** touch hot surfaces (Including oven cavity, oven door, turntable, rack or pan; use pot holder).

CONVECTION RACK

Use the convection racks for convection and combination cooking only.

Do not use rack in microwave-only mode.

For best results, place food on the Convection Rack (Medium rack, Low rack).

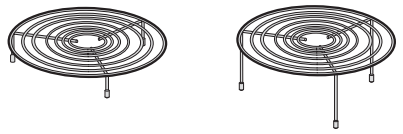

Low rack **Medium rack**

CONVECTION RACKS

DRIP PAN

A ceramic enamel drip pan has been included with your oven. When roasting in the oven, place food directly on the ceramic enamel pan. Place the rack inside the ceramic enamel drip pan. Center the drip pan and rack on the glass turntable.

When cooking is complete, use potholders to remove the drip pan and rack from the hot oven. **Take care not to spill the hot drippings**. Remove food from the rack.

For best results when broiling, remove the ceramic enamel pan and rack from the oven to turn food. Replace the tray and rack on the turntable to continue broiling.

Do not use in microwave-only mode.

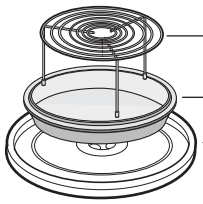

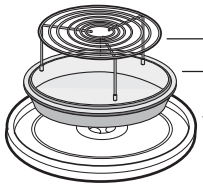

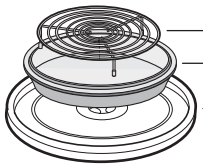

 © 2006 Maytag Services

Operating Instructions

CONVECTION BAKING WITH PREHEATING

Example: To set Convection Baking at 325°F. Place low or medium rack on glass turntable. Use drip pan if cooking meats or poultry on the rack.

STOP/CLEAR 1. Touch **STOP/CLEAR** pad.

Convection 2. Touch **CONVECTION** pad.

5 325°F 3. Touch a number pad to select baking temperature.

ENTER/START 4. Touch **ENTER/START** pad **twice**.

- After preheating, display scrolls **PLACE FOOD ON RACK** with sound. Open the door, place food on the convection rack.

2000 200°F450°F450°F450°F 5. Touch number pads for cooking time. You can enter a time up to 99 minutes 99 seconds. See Convection cooking Guide, page 24.

ENTER/START 6. Close the door and Touch **ENTER/START** pad.

NOTES:
- The oven temperature drops very quickly when the door is opened; however, this should not prevent food from being fully cooked during normal cooking time.
- When checking food for doneness during cooking, carefully remove food, rack and drip pad (if used) from the oven and close oven door to prevent excessive heat loss.

CONVECTION BAKING WITHOUT PREHEATING

(Meats, Casseroles and Poultry)

Example: To set Convection Baking at 325°F for 20 minutes. Place low or medium rack on glass turntable. Use drip pan if cooking meats or poultry on the rack.

STOP/CLEAR 1. Touch **STOP/CLEAR** pad.

Convection 2. Touch **CONVECTION** pad.

5 325°F 3. Touch a number pad to select baking temperature. (You can enter a temperature between 100°F and 450°F.)

ENTER/START 4. Touch **ENTER/START** pad **once**.

2000 200°F450°F450°F450°F 5. Touch number pads for cooking time. You can enter a time up to 99 minutes 99 seconds.

ENTER/START 6. Touch **ENTER/START** pad.

IMPORTANT:
- If you set an incorrect cooking time, just re-enter the correct cooking time and then touch **ENTER/START** pad.
- If you touch **STOP/CLEAR** pad then enter the correct cooking time, you will cancel the CONVECTION operation and will be cooking with microwave energy and **NOT** convection.

Operating Instructions

BROIL COOKING

Broiling is cooking under direct heat. This oven can broil meat, fish, poultry, and vegetables, or toast bread.

Your oven uses broil cooking whenever you use the **Broil** Pad.

- Foods that are suitable for broiling should be tender, moderately lean and no more than 1 inch thick. Fish steaks, chicken breasts and hamburgers are ideal for broiling.
- Always use either the tall or medium rack when broiling. Place the rack on the ceramic enamel drip pan.
- For even browning, turn the food over halfway through broiling.
- Do not leave the door open for long periods of time when using the broil element. This will cause the oven temperature to drop and could affect cooking performance.

BROILING RACK

Use the broiling rack for broil and auto broil cooking. **Do not** use racks in microwave-only mode.

For best results, place food on the broiling rack (High rack, Medium rack).

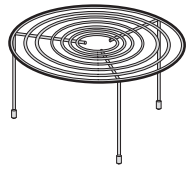

High rack

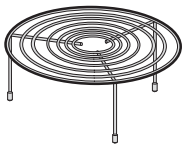

Medium rack

BROIL COOKING

Example: To set Broil Cooking for 20 minutes.

STOP/CLEAR — 1. Touch **STOP/CLEAR** pad.

Broil — 2. Touch **BROIL** pad.

2 0 0 0 (200°F 450°F 450°F 450°F) — 3. Touch number pads for cooking time. You can enter a time up to 99 minutes 99 seconds.

ENTER/START — 4. Touch **ENTER/START** pad.

NOTES:
- If you open the door or touch **STOP/CLEAR** pad during broiling, broiling will stop.
- To resume broiling, close the door and touch **ENTER/START** pad.
- When broiling time ends, the display will show **END** and four tones will sound.
- After cooking, the display will return to the time of day, when you open the door.

AUTO BROIL TABLE

FOOD		COOK TIME (Minutes per side) Medium - 160°F	COOK TIME (Minutes per side) Well done - 170°F	COMMENTS
Hamburger ¾"			11-13 minutes	Remove pan and turn meat over halfway throught cooking.
Beef Steak	Ribeye, ¾" to 1"	7-10 minutes	10-12 minutes	Remove pan and turn meat over halfway throught cooking.
	New York Strip, ¾" to 1"	7-10 minutes	10-12 minutes	
	T Bone Steak, 1"	9-11 minutes	11-13 minutes	
Poultry	Chicken Breast, bone in		10-12 minutes	Remove pan and turn meat over halfway throught cooking. • Cook chicken breast to 170°F. • Cook chicken legs/thigh to 185°F.
	Chicken Breast, boneless		9-11 minutes	
	Chicken Legs		11-14 minutes	
	Chicken Thighs		13-15 minutes	
Pork	Pork Chops, Boneless, ¾"	7-9 minutes	8-11 minutes	Remove pan and turn meat over halfway throught cooking. • Ham Steak - reheat to 140°F.
	Pork Chops, Bonel in, ¾"	7-9 minutes	8-11 minutes	
	Ham Slice, ½" to ¾"	5-7 minutes	6-8 minutes	
Fish	Fillet, ¾" to 1"		15-17 minutes (Total Time)	Do not turn fish. Cook fish until it flakes.
	Steak, ¾" to 1"		16-19 minutes (Total Time)	

 © 2006 Maytag Services

Care and Cleaning

CARE AND CLEANING

For best performance and safety, keep the oven clean inside and outside. Take special care to keep the inner door panel and the oven front frame free of food or grease build-up. **Never use rough powder or pads.** Wipe the microwave oven inside and out, including the hood bottom cover, with a soft cloth and a warm (not hot) mild detergent solution. Then rinse and wipe dry. Use a chrome cleaner and polish on chrome, metal and aluminum surfaces. Wipe spatters immediately with a wet paper towel, especially after cooking chicken or bacon. Clean your oven weekly or more often, if needed.

Follow these instructions to clean and care for your oven.

- Keep the inside of the oven clean. Food particles and spilled liquids can stick to the oven walls, causing the oven to work less efficiently.
- Wipe up spills immediately. Use a damp cloth and mild soap. Do not use harsh detergents or abrasives.
- To help loosen baked on food particles or liquids, heat two cups of water (add the juice of one lemon if you desire to keep the oven fresh) in a four-cup measuring glass at High power for five minutes or until boiling. Let stand in the oven for one or two minutes.
- Remove the glass tray from the oven when cleaning the oven or tray. To prevent the tray from breaking, handle it carefully and do not put it in water immediately after cooking. Wash the tray carefully in warm sudsy water or in the dishwasher.
- Clean the outside surface of the oven with soap and a damp cloth. Dry with a soft cloth. To prevent damage to the operating parts of the oven, don't let water seep into the openings.
- Wash the door window with very mild soap and water. Be sure to use a soft cloth to avoid scratching.
- If steam accumulates inside or outside the oven door, wipe with a soft cloth. Steam can accumulate when operating the oven in high humidity and in no way indicates microwave leakage.
- Never operate the oven without food in it; this can damage the magnetron tube or glass tray. You may wish to leave a cup of water in the oven when it is not in use to prevent damage if the oven is accidentally turned on.

CONVECTION/BROILING RACKS/DRIP PAN

Wash the convection and broiling racks and metal tray/drip pan with a mild soap and a soft or nylon scrub brush. Dry completely. Do not use brasive scrubbers or cleaners to clean racks and metal tray/drip pan.

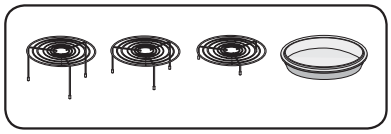

CLEANING THE GREASE FILTER

The grease filter should be removed and cleaned often, at least once a month.

⚠ CAUTION

To avoid risk of personal injury or property damage, do not operate oven hood without filters in place.

1. To remove grease filter, slide filter to the side. Pull filter downward and push to the other side. The filter will drop out.

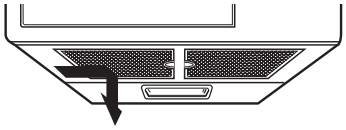

2. Soak grease filter in hot water and a mild detergent. Rinse well and shake to dry. **Do not use ammonia or place in a dishwasher. The aluminum will darken.**

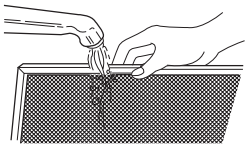

3. To reinstall the filter, slide it into the side slot, then push up and toward oven center to lock.

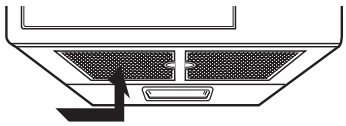

CHARCOAL FILTER REPLACEMENT

If your oven is vented to the inside, the charcoal filter should be replaced every 6 to 12 months, and more often if necessary. The charcoal filter cannot be cleaned. To order a new charcoal filter, contact the Parts Department at your nearest Authorized Service Center or call **1-800-536-6247** (inside U.S.A and Canada).

1. Unplug oven or turn off power at the main power supply.
2. Open the door.
3. Remove the two vent grille mounting screws. (2 middle screws)
4. Slide the grille to the left, then pull straight out.

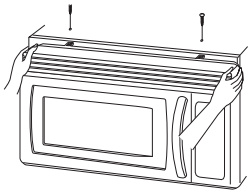

5. Remove old filter.

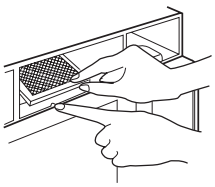

Care and Cleaning

6. Slide a new charcoal filter into place. The filter should rest at the angle shown.

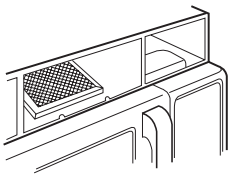

7. Replace the mounting screws and close the door. Turn the power back on at the main power supply and set the clock.

CHARCOAL FILTER PART NO. 8310P009-60

COOKTOP/NIGHT LIGHT REPLACEMENT

⚠ CAUTION

To avoid personal injury or property damage, wear gloves when replacing light bulb.

1. Unplug the oven or turn off power at the main power supply.
2. Remove the bulb cover mounting screws.

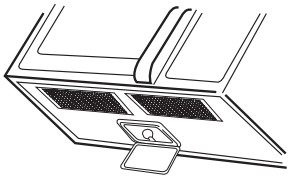

3. Replace bulb with 20 watt appliance bulb.
4. Replace bulb cover, and mounting screws.
5. Turn the power back on at the main power supply.

OVEN LIGHT REPLACEMENT

1. Unplug oven or turn off power at the main power supply.
2. Open the door.
3. Remove the vent cover mounting screws. (2 middle screws)
4. Slide the grille to the left, then pull straight out.

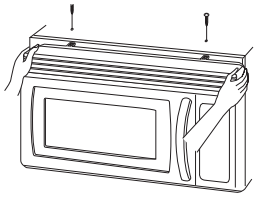

5. Remove the screw located above the door near the center of the oven that secures the bulb holder.

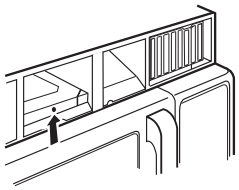

6. Remove bulb holder.

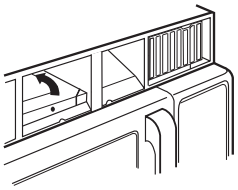

7. Replace bulb with a 20 watt appliance bulb.
8. Replace the bulb holder.
9. Replace the grille and 2 screws. Turn the power back on at the main power supply.

OPTIONAL

Filler Kits

UXA3036BDB - BLACK
UXA3036BDW - WHITE
UXA3036BDS - STAINLESS STEEL

When replacing a 36" range hood, the filler kit fills in the additional width to provide a custom built-in appearance.

For installation between cabinets only; not for end-of-cabinet installation.

Each kit contains two 3"-wide filler panels.

 © 2006 Maytag Services